TDP 6s® Tablet Press User Manual

We don’t just sell machines—
we provide service.

Copyright Notice

© LFA Machines Oxford Limited, published in 2020 by LFA Machines Oxford Limited 2019. Registered in England and Wales, company number 08428898, registered office for service Demar House 14 Church Road East Wittering, Chichester, West Sussex, PO20 8PS.

All rights reserved. No part of this publication may be reproduced or transmitted, in any form or by any means, or stored in any retrieval system of any nature, without prior permission, except for fair dealing under the Copyright, Designs and Patents Act 1988, or in accordance with the terms of license issued by the Copyright Licensing Agency in respect of photocopying and/or reprographic reproduction. Application for permission for other use of the copyright material including permission to reproduce extracts in other published works shall be made to the publisher. Full acknowledgment or author, publisher and source must be given.

All trade marks are acknowledged and are owned by their respective owners.

Important Safety Information

READ THIS BEFORE OPERATING MACHINE

Intended Use

The intended use of this machine is to press dry raw materials into tablet form.
Potential misuse of this machine includes:

- Applying too much force to the powder.
- Trying to fill the Die with powder by hand.
- Inserting Tooling that is too big for the machine.
- Not properly mounting the machine.
- Using powders that could explode under pressure.
- Using wet or damp material.

Personal Protection

For personal protection while transporting the TDP 6s®, abide by these actions:

- Use an engine hoist to lift the machine.
- Wear steel toe boots to prevent foot injury.
- Wear heavy duty grip gloves to ensure firm grasp on machine.
- Wear back support belt to prevent injury if needed.

For personal protection while operating the TDP 6s®, abide by these actions:

- Avoid wearing loose jewelry to prevent machine entanglement.
- Contain long hair to prevent machine entanglement.
- Wear safety goggles.
- Wear disposable latex/rubber gloves.
- Wear a hairnet (food grade products only).
- Wear a beard net if needed (food grade products only).

General Hazards

- Be aware of risk of entanglement and pinch point due to moving parts.
- Do not operate in a wet environment or with wet hands due to risk of electrical shock or burn.
- Do not operate if any wires are damaged, pinched, or frayed due to risk of electrical shock or burn.
- Keep out of reach of children.
- Keep fingers away from all moving parts.
- Ensure that it is secured to a workbench to prevent from falling.
- Inspect machine before use.
- Check that nuts and bolts are suitably tightened.
- Use this machine only for its intended use as described in this manual.
- Turn off and unplug the machine before conducting cleaning and maintenance.
- Do not modify the machine in any way.
- Turn off and unplug the machine before conducting cleaning and maintenance.

Important Safety Information

READ THIS BEFORE OPERATING MACHINE

Symbols

WARNING

This signals potential risk for personal injury.

WARNING

This signals potential risk for electrical shock.

CAUTION

This signals potential risk for damage to the machine or other parts.

Modes for Stopping

In the case of an emergency during manual operation, immediately stop turning the Hand Wheel and remove yourself from the TDP 6s®.

In the case of an emergency during motor operation, immediately press the red OFF button (see below) and unplug.

Table of Contents

Copyright Notice 2

Important Safety Information 3

Intended Use 3

Personal Protection 3

General Hazards 3

Important Safety Information 4

Symbols 4

Modes for Stopping 4

TDP 6s® Parts List 7

Preface 8

Training 9

On-Site/Off-Site Training 9

Training via Video Chat/Phone 9

LFA Articles 9

LFA Videos 9

Installation 10

Tools and Materials Needed 10

The Appropriate Workstation for the Machine 10

Assembly 13

Mounting the TDP 6s® 14

Manual and Electrical Controls 16

Settings and Adjustment 19

Maintenance 25

General Maintenance Prescriptions 25

Lubrication 25

Dismantling for Repair and Replacement 28

Wear Parts and Causes of Damage 28

Tooling 29

Boot Timing Bar 35

Boot 37

V Belts 39

Troubleshooting 41

Common Machine/Part Issues 41

Common Tablet Issues 43

De-Jamming the TDP 6s® 44

Cleaning 46

Storing the TDP 6s® 51

Appendix 53

Glossary 53

Description of TDP 6s® Parts 54

Material of Contact Parts 62

Technical Specifications 62

Maintenance Checklist 63

Resources 67

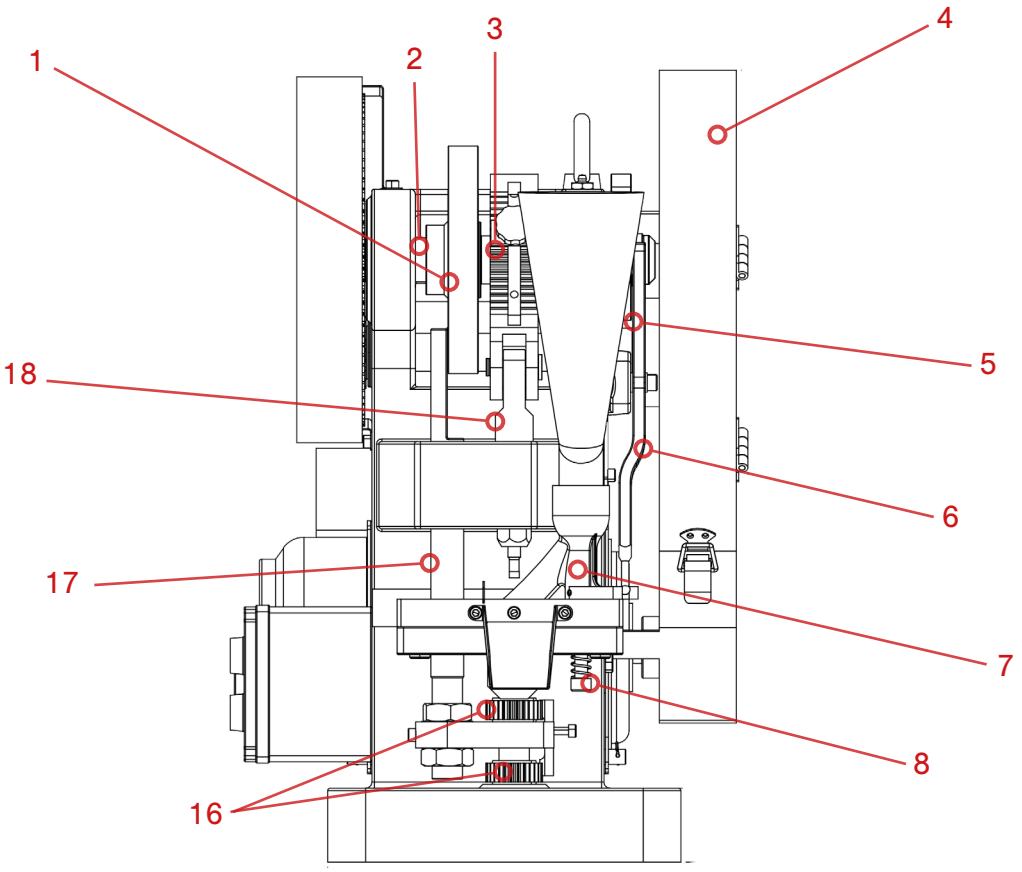
1
2
3
4
5
6
7
8
16
17
18

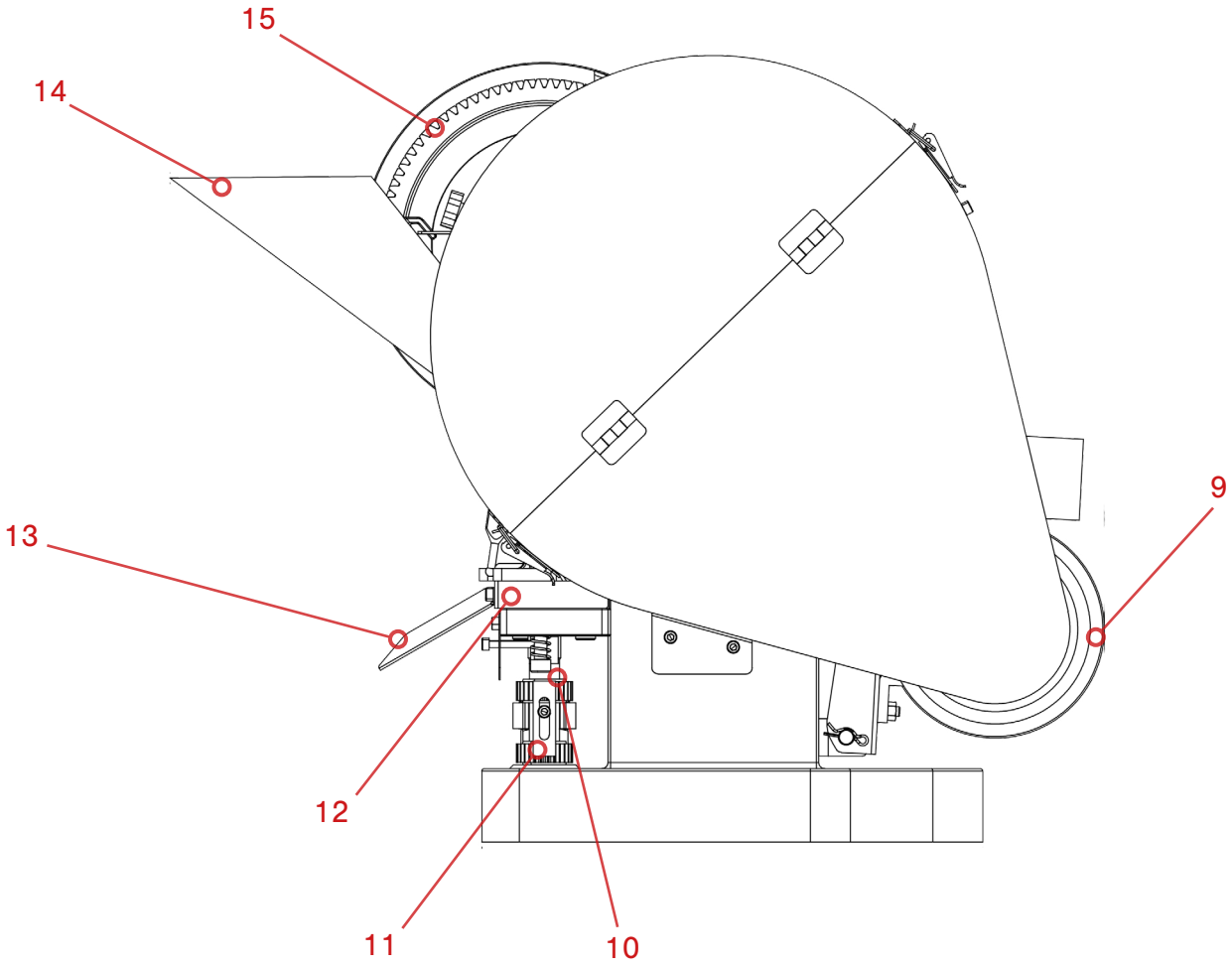
9
10
11
12
13
14
15

TDP 6s® Parts List

1. Lower Drift Pin Assembly Timing Cam (#AFC0052)
2. Top Cam Drive Shaft (#AFC0037)
3. Eccentric Sheave/Pressure Adjustment (#AFC0004)
4. Hand Wheel (under safety cover) (#AFC0058)
5. Boot Timing Cam (#AFC0038)
6. Boot Timing Bar (#AFC0018)
7. Boot (#AEC0036)
8. Boot Bolt and Spring (#AEC0051)
9. Electric Motor (#AFC0042)
10. Lower Drift Pin Assembly (#AEC0011)
11. Lower Drift Pin Assembly Locking Bar (#AEC0013)
12. Base Plate (#AFC0008)
13. Ejection Tray (#AEC0049)
14. Hopper (#AEC0030)
15. Cam Drive Cog (#AFC0050)
16. Lower Drift Pin Assembly Cogs (#AEC0012)
17. Lower Assembly Timing Rod (#AFC0014)
18. Upper Drift Pin Assembly (#AFC0002)

Preface

The TDP 6s® Tablet Press has the ability to press tablets in a wide variety of sizes from a powder formulated with dry granular materials and an excipient. By generating up to 60 kN of pressure with either electrical or manual power, the TDP 6s® can produce up to 3,000 tablets an hour with interchangeable dies. This machine can create most types of tablets, including irregularly shaped pills, up to 25 mm in diameter and 6 mm thick. Useful for work in the field and on location, the TDP 6s® is popular with a range of industries such as hospitals, research facilities, and laboratories in the pharmaceutical, food, and chemical industries.

The purpose of this document is to support your understanding of the TDP 6s®'s components, features, functions, and design. With this manual, you will be able to successfully operate and maintain your TDP 6s® machine.

The user manual's content includes:

- Important safety information
- TDP 6s® installation instructions
- Description of the TDP 6s®'s operation
- TDP 6s® maintenance information
- Appendix with supplemental information

Training

TDP 6s® training is essential for the machine's successful operation and your personal safety. There are several methods to prepare you for working with the TDP 6s®.

On-Site/Off-Site Training

LFA technicians can travel and train you at your own facility with your own machines. LFA also offers free training at our UK, USA, and Taiwan facilities for all our customers and their teams. For more information, go to https://www.lfatabletpresses.com/services

Training via Video Chat/Phone

Using an online video chat system, an LFA technician can interact face-to-face with you and assist with your understanding of the machine. Or, if you prefer, LFA can provide training via phone for all customers who call the office. To set up a training, call or email your local LFA office:

UK
Phone
+44 (0) 0345 165 20 25
Email
sales@lfamachines.com

USA
Phone
(682) 312-0034
Email
sales.usa@lfamachines.com

Taiwan
Phone
+886 2773 74704
Email
sales.asia@lfamachines.com

LFA Articles

LFA writes informative articles about desktop tablet presses, which includes instructions, procedures, and guides. To access the articles, go to https://www.lfatabletpresses.com/articles

LFA Videos

LFA has created several videos involving the TDP 6s® and other desktop tablet presses. To access the videos, go to https://www.lfatabletpresses.com/videos or https://www.youtube.com/user/TabletPilPress

Installation

Tools and Materials Needed

Before you install and operate the TDP 6s®, it is best to have the following tools and materials on hand for general operation and maintenance:

- Engine hoist or lift and lifting strap
- Mounting materials such as:
  - Non-slip pad (such as a yoga mat cut to fit the machine's base) OR anti-vibration pads
  - Power drill
- Hammer
- Gear puller
- Rubber mallet
- Metric wrench set
- Pliers/grippers
- Flathead screwdriver
- Set of metric Allen keys with ball ends
- Long wire pipe cleaner
- Lubricant (NSF approved for food grade products)
- Grease gun
- Toothbrush
- Bagless vacuum
- Sanitizer (e.g. Maker's Mark Commercial Sanitizer)
- Cleaning brush set
- Plastic sheet or something similar to cover machine
- Safety goggles
- Disposable latex/rubber gloves
- Hairnet and/or beard net (food grade products only)
- Sterile shoe covers (food grade products only)

The Appropriate Workstation for the Machine

Find a stable workspace surface that supports the TDP 6s®'s 160 kg (about 352 lbs) weight, such as a wooden bench (use stainless steel if for food grade industry). Another important thing to consider is to find a bench that has a suitable working height for you.

Environmental Conditions

It is important that the environment in which you operate and store the TDP 6s® has the appropriate temperature and relative humidity levels. These two environmental factors can potentially cause the machine to rust and/or cause the tablets to have a lower quality. The table below shows the acceptable temperature and relative humidity levels:

MACHINE	TEMPERATURE		HUMIDITY
TDP 6s®	°C	°F	20-80% RH
	0-40	32-104	

The shipping crate will contain the following:
1. The assembled TDP 6s®

2. The Tooling (already installed)

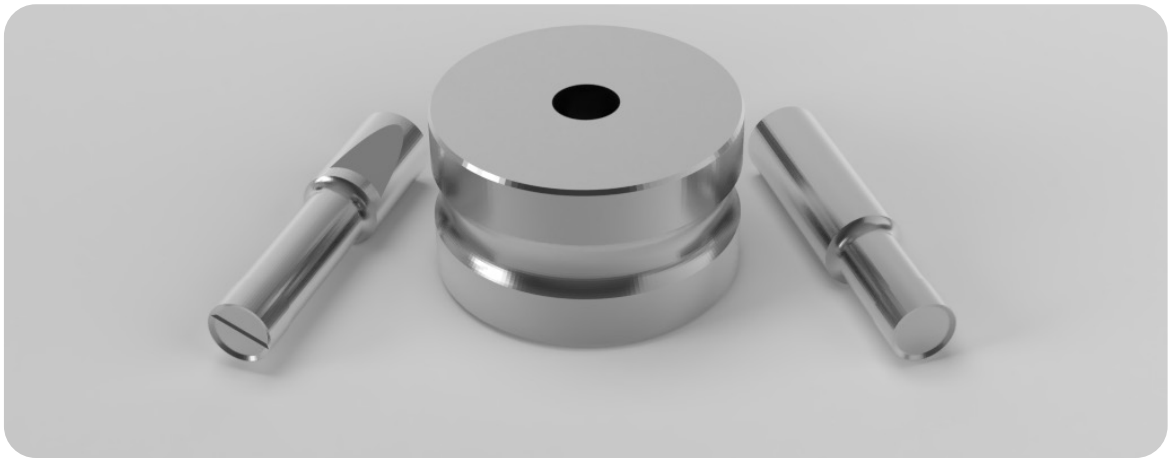

Unpacking the TDP 6s®

Watch a video of a TDP 6s® unboxing at https://www.lfatabletpresses.com/videos/tdp-5-unboxing-setup

Tools Needed

- Flathead screwdriver
- Hammer
- 17 mm wrench

Instructions

1. Pry open each of the clips on the shipping container with a flathead screwdriver.

1.1 Note: Hammer the clips even further down to aid in removing the shipping container from the base.

2. Lift the top of the shipping container from its base, which is bolted to the TDP 6s®.
3. Remove the plastic wrapping.

3.1 Note: Save the wrapping for future transport and/or storage.

4. Remove the bolts from the shipping container's base with a wrench.

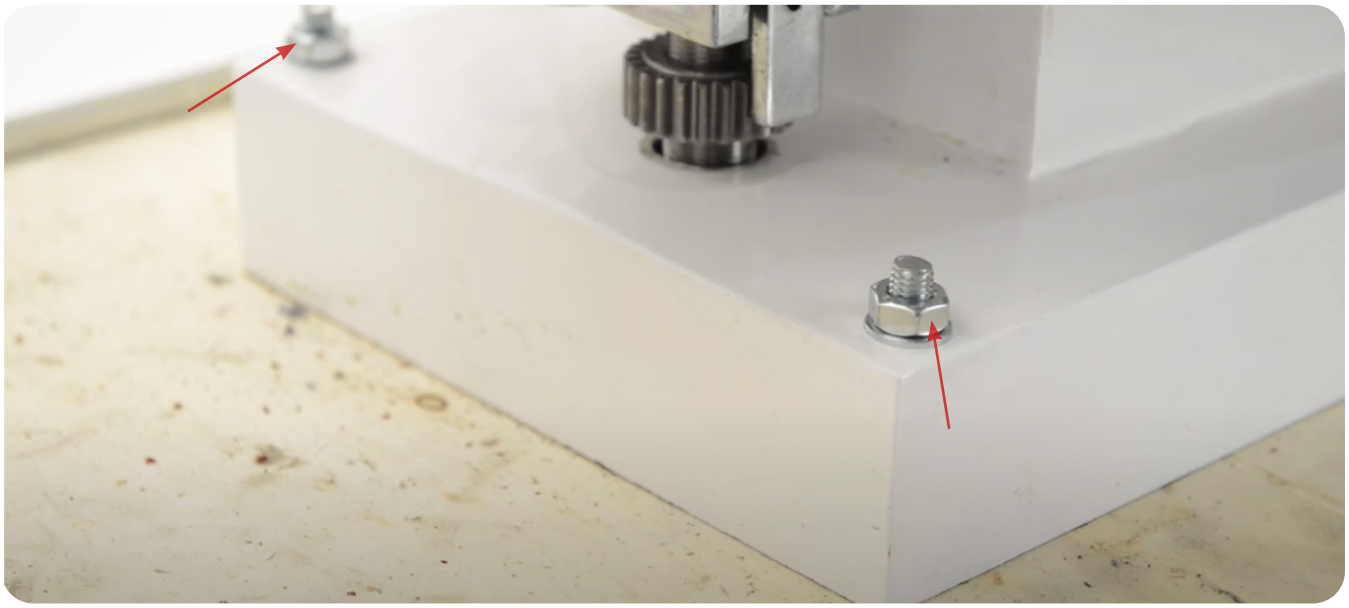

4.1 Note: Keep the bolts and the shipping container’s base in case you need to move or relocate the TDP 6s®.

Assembly

The TDP 6s® comes fully assembled.

Mounting the TDP 6s®

WARNING: To prevent personal injury, wear steel toe boots and heavy duty grip gloves while transporting the TDP 6s®.

LFA does NOT recommend carrying the machine manually but rather with an engine hoist. At least two people should be involved (one operating the engine hoist and one stabilizing the machine) in removing the machine from the shipping container and placing it in the workspace.

Transporting the TDP 6s®

Tools and Materials Needed

- Engine hoist and lifting strap

Instructions

1. Secure the engine hoist onto the eyelet bolt attached to the top of the TDP 6s® Base.

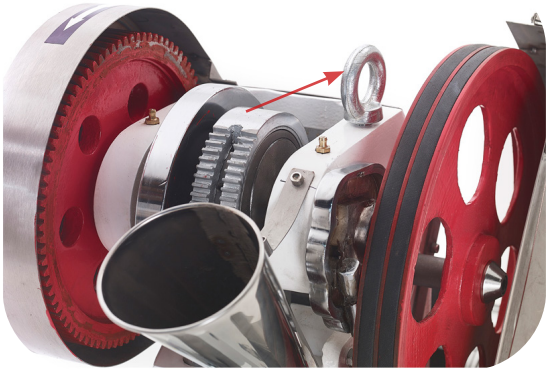

2. Wrap the lifting strap to support both the bottom and top of the TDP 6s®.
3. Carefully transport the machine to the desired workspace.

Bolting the TDP 6s®

The TDP 6s® Base comes with four bolts and four bolt holes. Because the machine's movement could cause it to fall off the workspace surface during operation, which creates potential for injury to self and to the machine, it is important to ensure that it will not move by bolting down the TDP 6s®. There are other options as well that can prevent the TDP 6s® from moving, which are described below:

Non-Slip Pad

Placing a pad or mat that grips the surface underneath the TDP 6s® will stabilize any movement. What works well is anything similar to a yoga mat. Simply cut the pad to a size that is slightly bigger than the TDP 6s®'s base, and then bolt the base through the mat and into the workspace surface.

Anti-Vibration Pads

Anti-vibration pads underneath the TDP 6s®'s base not only absorb noises and vibrations, but also reduce the machine's movement. Similar to using a non-slip pad, the anti-vibration pads also need to be bolted through into the workplace surface.

WARNING: Anti-vibration pads with feet indentations, such as those used for washing machines, are not suitable for the TDP 6s®. They may cause the machine to lose its balance and fall off the workspace surface, potentially resulting in personal injury.

Note: Before bolting the machine to the workspace surface, ensure that an appropriate electrical outlet (240 v/110 v) is nearby.

Once you have determined where the bolts will be, drill four holes into the workspace surface. Then, insert the bolts through the TDP 6s®'s base and the workspace surface and tighten them as necessary.

Manual and Electrical Controls

Basic Components

A description of the principal components follows:

- The **Hand Wheel** can be turned to start the cam track's direction.
- The **Top Cam Drive Shaft** guides the punches' movement.
- The **Hopper** holds the dry materials that will be compressed.
- The **Boot** moves the materials from the Hopper to the Tooling and ejects the tablets.
- The **Die** defines or molds the size and shape of the powder.
- The **Upper Punch** and **Lower Punch** compress the materials within the Die.

TDP 6s® Process

The basic mechanism of the TDP 6s® involves filling the Tooling (Die, Upper Punch, and Lower Punch) with powder, compressing the powder, and ejecting the tablet.

Filling the Tooling with Powder

The dry materials are poured into the Hopper, which funnels the powder into the Boot. As the Hand Wheel is manually operated, the Top Cam Drive Shaft withdraws the Upper Punch from the Die and moves up the Lower Punch to the Die.

When the machine is operated by the motor, the Drive Belt Pulley and V Belts initiate the movement of the Cam Drive Cog, which moves the Top Cam Drive Shaft to withdraw the Upper Punch from the Die and pushes up the Lower Punch.

Compressing the Powder

After the powder is filled in the Tooling, the Top Cam Drive Shaft drives the Upper Punch into the Die, and the Lower Punch is then raised by the Top Cam Drive Shaft. Both punches then move together to compress the powder under high pressure.

Ejecting the Tablet

After both punches compress the powder into a tablet, the Top Cam Drive Shaft withdraws the Upper Punch while the Lower Punch is pushed upward to expel the tablet. The tablet is then pushed out of the way by the Boot to prepare for the next tablet compression.

How to Create Tablets with the TDP 6s®

Tools and Materials Needed

- Raw material formulation
- TDP 6s®
- Safety goggles
- Disposable latex/rubber gloves (for food grade products and to protect hands from grease)
- Hairnet and/or beard net (food grade products only)
- Sterile shoe covers (food grade products only)

WARNING: For personal protection while operating the TDP 6s®, contain long hair and do not wear loose jewelry.

Instructions

Note: Wear latex/rubber gloves (and appropriate food grade attire if applicable) during this process.

1. Pour the dry materials into the Hopper.
    1.1 Note: Ensure that the TDP 6s® is unplugged from the electrical outlet.
2. Loosen the locks on the upper section of the Hand Wheel cover and pull down the cover.

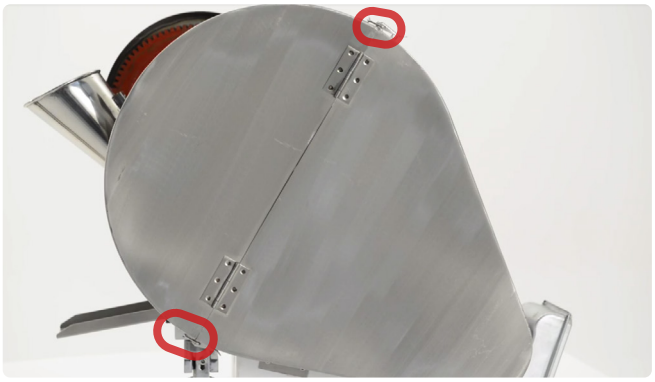

3. Rotate the Hand Wheel in the direction indicated by the arrow located on the Cam Drive Cog Safety Cover.
    3.1 Note: Always manually operate the TDP 6s® for one rotation to ensure that it is operating correctly.
4. Plug in the TDP 6s® to an electrical outlet.
5. Press the green button (ON) to start to start the machine, and the red button (OFF) to turn off the machine.

Settings and Adjustment

The TDP 6s®'s settings can be adjusted. Tuning the Tooling can help with changing the tablets' characteristics and how they are ejected from the machine.

Ejection Height

When the Upper Punch is fully lifted, the Lower Punch in its highest position should be flush with the Die:

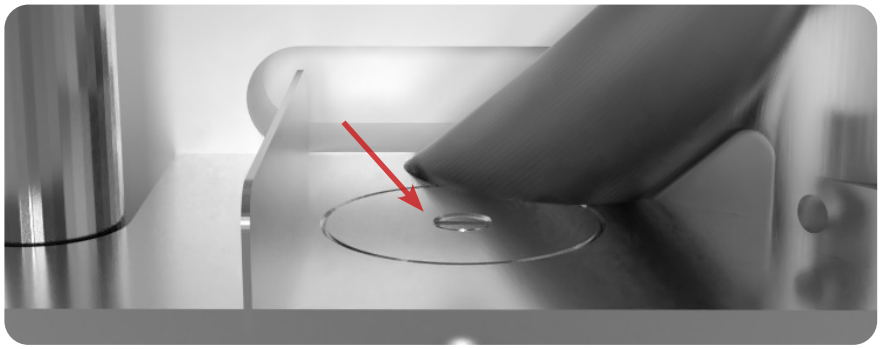

If the Lower Punch is above or below the Die's face, it will affect how smoothly the tablet is ejected. Adjusting the ejection height will help with this and can vary with different forms of Tooling.

Tools and Materials Needed

- Set of metric Allen keys with ball ends
- Crosshead screwdriver
- Disposable latex/rubber gloves (for food grade products and to protect hands from grease)
- Hairnet and/or beard net (food grade products only)
- Sterile shoe covers (food grade products only)

WARNING: To prevent any potential personal injury, unplug the TDP 6s® from the electrical outlet

Instructions

Note: Wear latex/rubber gloves (and appropriate food grade attire if applicable) during this process.

1. Produce a test tablet to determine how the Tooling should be adjusted.
2. Rotate the machine until the Lower Drift Pin Assembly is at its highest position and the Boot is at the position to eject the tablet.
3. Remove the Ejection Tray with a crosshead screwdriver.

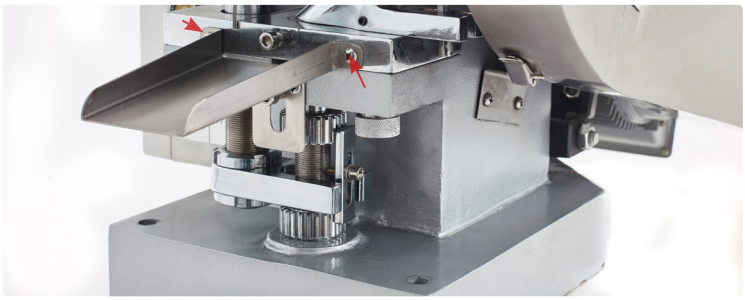

4. Remove the Lower Drift Pin Assembly Locking Bar bolt with an Allen key.
5. Rotate the Upper Cog in the Lower Drift Pin Assembly by hand.
    5.1 Note: To raise ejection height, turn clockwise. To lower ejection height, turn counterclockwise.

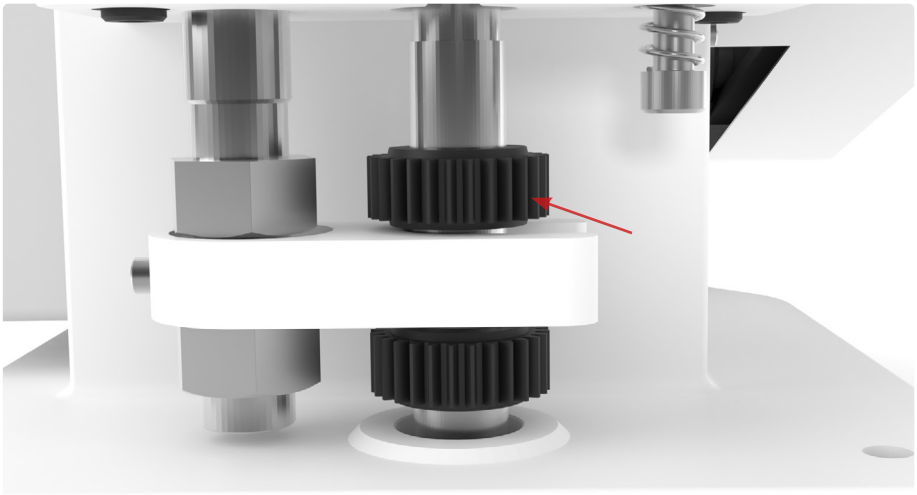

6. Run an ungloved finger over the Base Plate to ensure the Die is flush.
7. Secure the bolt in the Lower Drift Pin Assembly Locking Bar with an Allen key.
    7.1 Note: Ensure that the Lower Drift Pin Assembly Locking Bar is situated vertically.

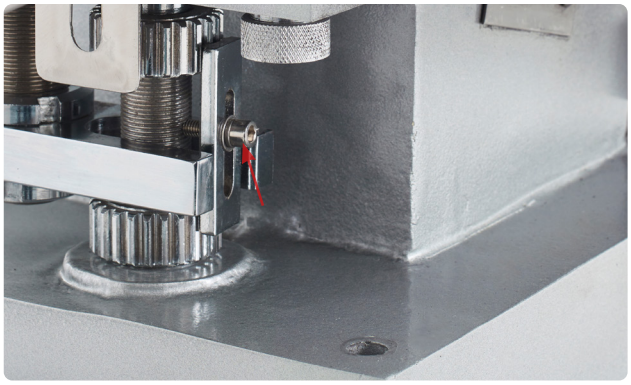

8. Reattach the Ejection Tray to the TDP 6s®.

Fill Depth

At times, a tablet will be too small or too large, and its weight must change. Adjusting the fill depth determines the tablet's thickness and weight. This can be controlled by changing how high or low the Lower Punch sits.

Tools and Materials Needed

- Set of metric Allen keys with ball ends
- Crosshead screwdriver
- Disposable latex/rubber gloves (for food grade products and to protect hands from grease)
- Hairnet and/or beard net (food grade products only)
- Sterile shoe covers (food grade products only)

Instructions

Note: Wear latex/rubber gloves (and appropriate food grade attire if applicable) during this process.

WARNING: To prevent any potential personal injury, unplug the TDP 6s® from the electrical outlet.

1. Produce a test tablet to determine how the Tooling should be adjusted.
2. Remove the Ejection Tray with a crosshead screwdriver.

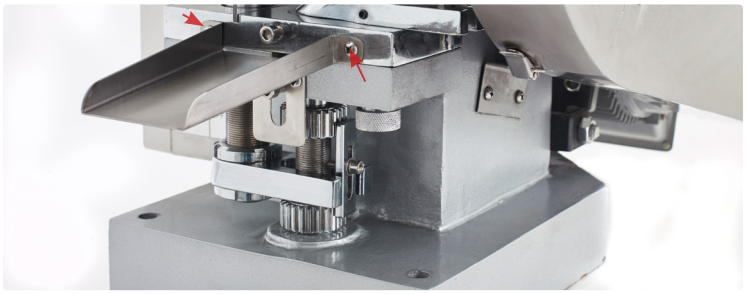

3. Remove the Lower Drift Pin Assembly Locking Bar with an Allen key.
4. Rotate the Lower Cog in the Lower Drift Pin Assembly by hand.
    4.1 Note: To increase the tablet weight, turn counterclockwise. To decrease the tablet weight, turn clockwise.

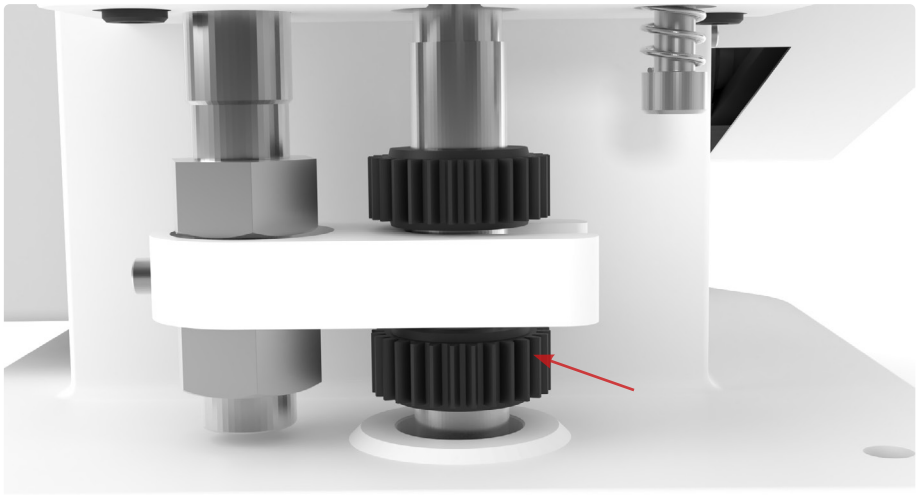

5. Replace the bar in the Lower Drift Pin Assembly Locking Bar with an Allen key.
    5.1 Note: Ensure that the Lower Drift Pin Assembly Locking Bar is situated vertically.

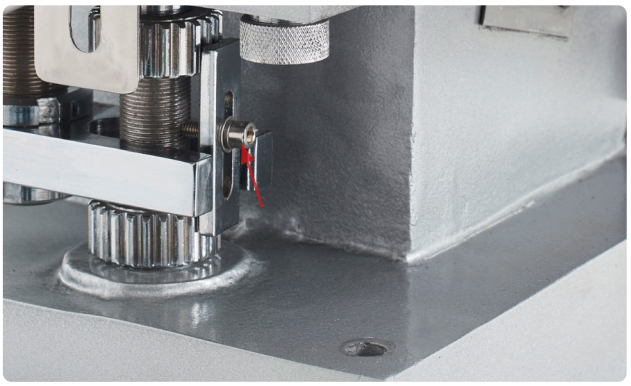

6. Produce a test tablet to make sure the weight is correct.
7. Reattach the Ejection Tray to the TDP 6s®.

Punch Pressure

Sometimes tablets come out too soft and will crumble easily, which happens often after increasing the fill depth. Or, the machine can jam and will not be able to turn over. To correct this, the punch pressure needs to be adjusted in order to increase the tablet's firmness/de-jam the machine.

Tools and Materials Needed

- Disposable latex/rubber gloves (for food grade products and to protect hands from grease)
- Hairnet and/or beard net (food grade products only)
- Sterile shoe covers (food grade products only)

WARNING: To prevent any potential personal injury, unplug the TDP 6s® from the electrical outlet.

Instructions

Note: Wear latex/rubber gloves (and appropriate food grade attire if applicable) during this process.

1. Produce a test tablet to determine how the Tooling should be adjusted.
2. Loosen the Pressure Adjustment Knob by turning it counterclockwise.

3. Grab the knob and move the Pressure Adjustment to change the punch pressure.
    3.1 Note: Move the Pressure Adjustment down to lower the Upper Punch and increase the punch pressure. Move the Pressure Adjustment up to raise the Upper Punch and decrease the punch pressure.

CAUTION: Applying too much pressure can damage the machine and/or Tooling.

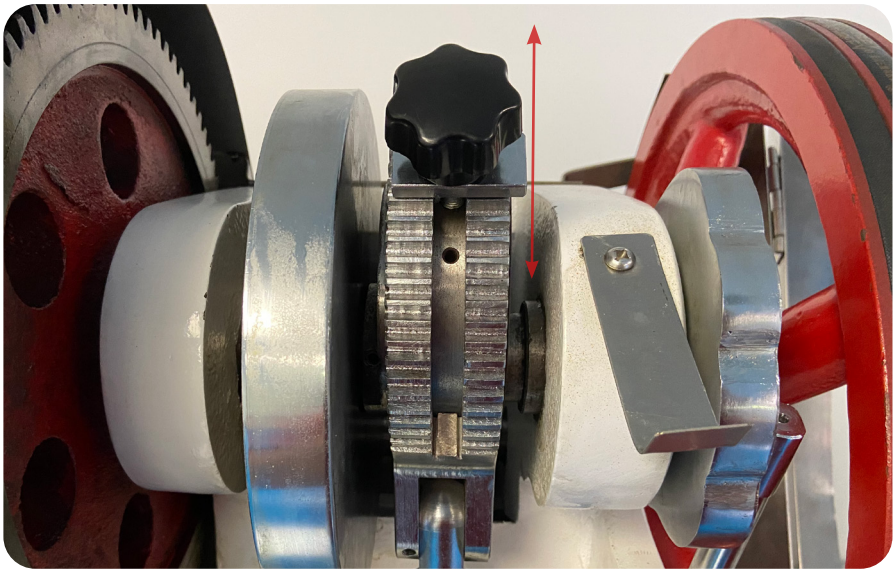

4. Tighten the Pressure Adjustment Knob by turning it clockwise to set the adjustment.

Maintenance

To ensure that the TDP 6s® will have a long operational life, maintenance is essential. This section includes methods for replacing parts, troubleshooting solutions, and how often to grease and clean your machines to keep its performance optimal.

General Maintenance Prescriptions

- Use the maintenance checklist (found in the Appendix) before, during, and after machine operation.
- Make sure all grease points are maintained and regularly lubricated.
- Use an appropriate amount of lubricant. Excess grease can drip into the tablets as they are formed.
- Before reassembling the machine after cleaning, make sure that the parts are dried and oiled.
- Constantly check for any loose nuts and/or screws before, during, and after machine operation.
- If the machine is not used for more than a week, place the Tooling in an air-tight container and cover in lubricant.

Lubrication

Regularly greasing your machine is vital to prolonging its operational life. Parts that are not greased properly can make the machine seize up and cause major problems later. LFA recommends maintaining a lubrication schedule for your TDP 6s®, which can be found in this section.

Tools and Materials Needed

- Grease gun
- Lubricant/grease (food grade if machine has contact with the food or drug product)
- Set of metric Allen keys with ball ends
- Disposable latex/rubber gloves (for food grade products and to protect hands from grease)
- Hairnet and/or beard net (food grade products only)
- Sterile shoe covers (food grade products only)

WARNING: To prevent any potential personal injury, unplug the TDP 6s® from the electrical outlet.

Instructions (continued on next page)

Note: Wear latex/rubber gloves (and appropriate food grade attire if applicable) during this process.

1. Rub a finger’s worth of grease on the Boot Timing Cam’s side.
    1.1 Note: Be sure to lubricate the Boot Timing Cam Runner.

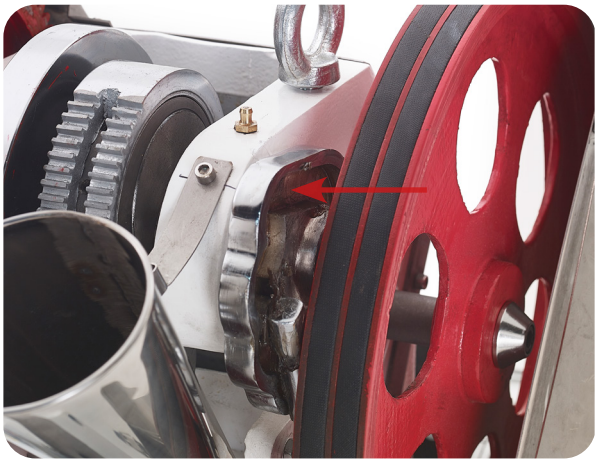

2. Lubricate the Top Cam Drive Shaft's Grease Nipples with the grease gun.
    2.1 Note: Rotate the Hand Wheel during this to ensure grease gets in.

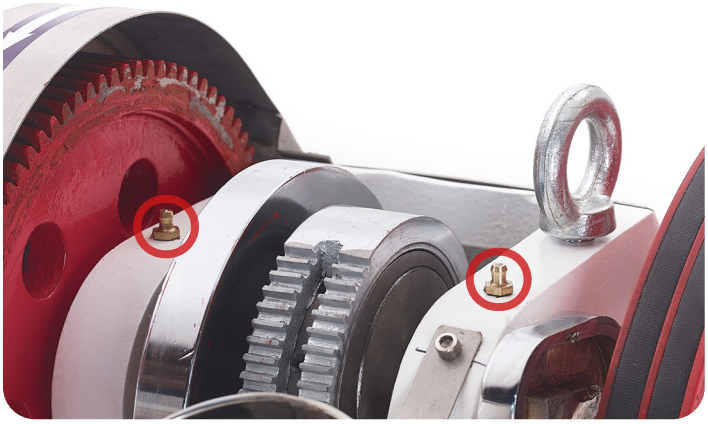

3. Lubricate the Cam Drive Cog's Pinion Gear and the Top Cam Drive Shaft Grease Nipples.

Lubrication Schedule

LFA recommends the following TDP 6s® parts to be lubricated according to the following frequency:

Part	Location	Image	Frequency	Type of Lubricant
Tooling heads	The heads of the Upper Punch and Lower Punch	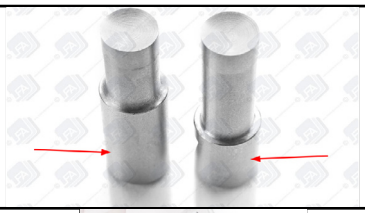	Visually inspect and apply when dry	Assembly paste
Tooling (after cleaning)	Storage container		Apply after cleaning	Mineral oil
Top Cam Drive Shaft	The topmost Grease Nipples	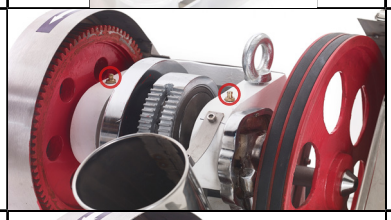	Apply (a) after every 5000 tablets, (b) after a deep clean, or (c) when the press has not been used for an extended period of time	NLGI Grade 2
Cam Drive Cog	Teeth on cog	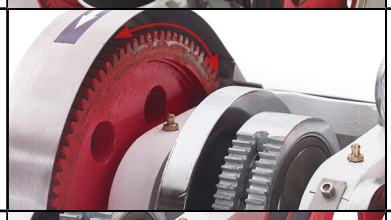	Apply (a) after every 5000 tablets, (b) after a deep clean, or (c) when the press has not been used for an extended period of time	NLGI Grade 2
Boot Timing Cam	Cam track and top of Boot Timing Bar	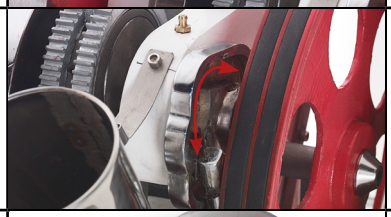	Apply (a) after every 5000 tablets, (b) after a deep clean, or (c) when the press has not been used for an extended period of time	NLGI Grade 2
Pinion Gear and Top Cam Drive Shaft	Grease Nipples on Cam Drive Cog and Pinion Gear		Apply (a) after every 5000 tablets, (b) after a deep clean, or (c) when the press has not been used for an extended period of time	NLGI Grade 2
Lower Drift Pin Assembly Timing Rod	The points at which the Lower Drift Pin Assembly, Upper Drift Pin Assembly Mounting Block, and TDP 6s® Base meet.	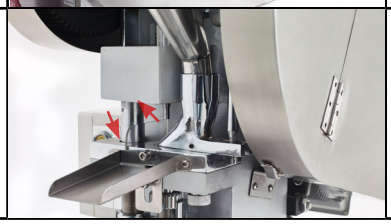	Apply a small amount whenever the press will be left unattended for an extended period of time	Mineral oil

Dismantling for Repair and Replacement

Eventually due to wear and tear, some parts of the TDP 6s® will need to be removed for repair and replacement. To prevent any delays in your tablet production, it is best practice to keep extra parts just in case.

To buy a TDP 6s® part replacement, simply go to
https://www.lfatabletpresses.com/products/pill-press-machine-spare-parts/tdp-6s-parts

Warranty
To access LFA's warranty policy, go to https://www.lfatabletpresses.com/warranty
If your part is eligible for warranty, have your part's serial number on hand and please contact LFA:

UK
Phone
+44 (0) 0345 165 20 25
Email
sales@lfamachines.com

USA
Phone
(682) 312-0309
Email
sales.usa@lfamachines.com

Taiwan
Phone
+886 2773 74704
Email
sales.asia@lfamachines.com

WARNING: To prevent any potential personal injury, ALWAYS unplug the TDP 6s® from the electrical outlet when replacing parts.

Wear Parts and Causes of Damage

Wear Part	Cause of Damage
Tooling	The Tooling can become chipped or broken. Lead times for a new set of Tooling can take as long as 6-8 weeks, so LFA recommends having a spare set or two.
Boot	The TDP 6s® Boot is formed from a toughened plastic. This part can become trapped between the Die Bore and the Upper Punch, which usually results from user error.
Boot Timing Bar	In the event that the Boot is trapped or damaged by the Upper Punch, the Boot Timing Bar can become bent.
V Belts	The V Belts on the TDP 6s® is used to drive all of the power from the Motor to the upper cams. This can lose some of its tension and wear over time, which affects the maximum pressure.

Tooling

If you want to change the shape and diameter of the tablet, or if the Upper Punch, Lower Punch, and/or Die you currently have is damaged, it is necessary to change the Tooling.
To buy new Tooling from LFA, simply go to https://www.lfatabletpresses.com/products/tablet-press-tooling
To watch a video of a TDP® Tooling change, go to https://www.lfatabletpresses.com/videos/how-to-change-tdp-punch-die-tooling

Tools and Materials Needed

- Set of metric Allen keys with ball ends
- Set of metric wrenches
- Crosshead screwdriver
- Grippers or pliers
- Tooling/die set (Upper Punch, Die, and Lower Punch)
- Hammer (if Die is difficult to remove)
- Disposable latex/rubber gloves (for food grade products and to protect hands from grease)
- Hairnet and/or beard net (food grade products only)
- Sterile shoe covers (food grade products only)

WARNING: To prevent any potential personal injury, ALWAYS unplug the TDP 6s® from the electrical outlet when replacing parts.

Instructions

Note: Wear latex/rubber gloves (and appropriate food grade attire if applicable) during this process.

Remove the Tooling

1. Remove the Hopper carefully and catch any powder still inside of it.
2. Remove the Ejection Tray with a crosshead screwdriver.

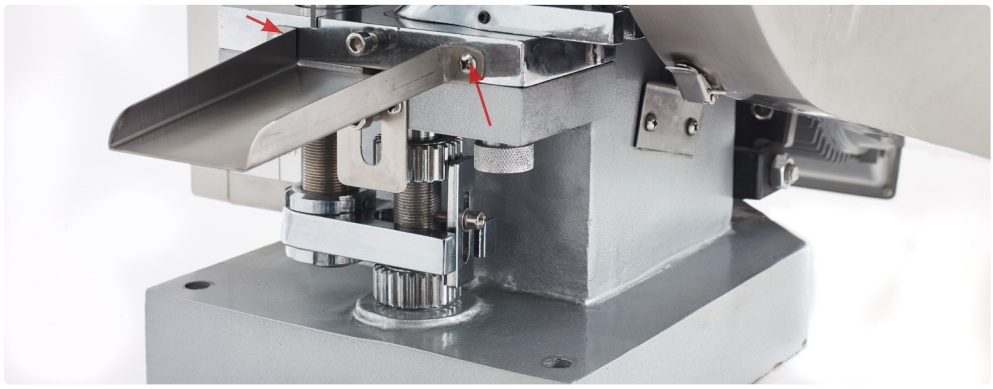

3. Loosen the Boot's set screw with an Allen key.

4. Remove the Boot Bolt and Spring underneath the Boot.

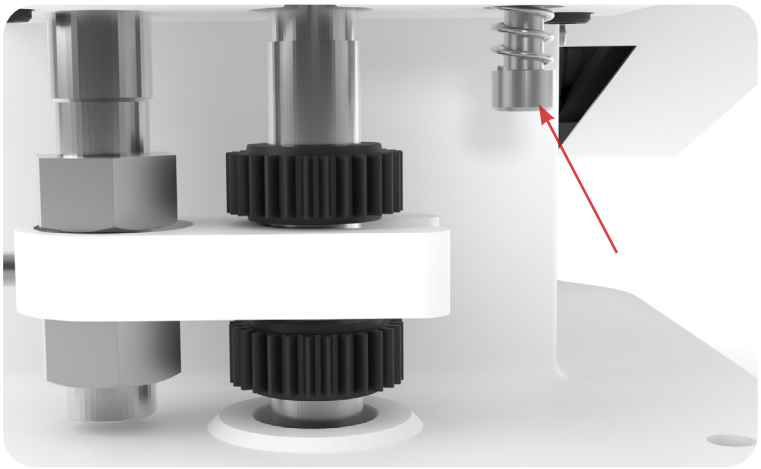

5. Take off the Boot carefully and remove any powder still inside it.
6. Loosen the two bolts underneath the Base Plate with a 17 mm wrench.

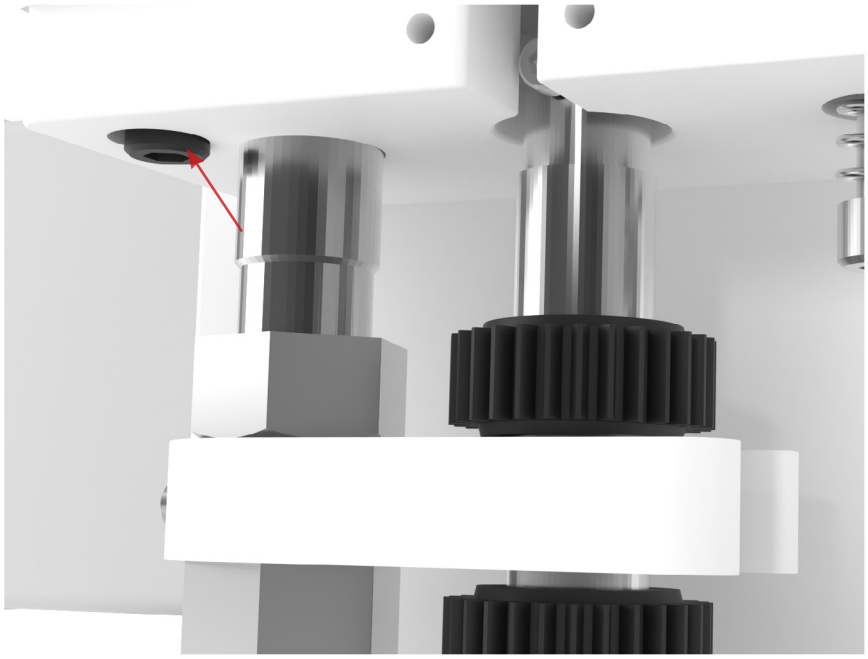

7. Turn the Hand Wheel until the Upper Drift Pin Assembly is lowered.
8. Loosen the Upper Punch Die Locking Nut with a 22 mm wrench while keeping the Upper Punch Drift Assembly in place with another 22 mm wrench.

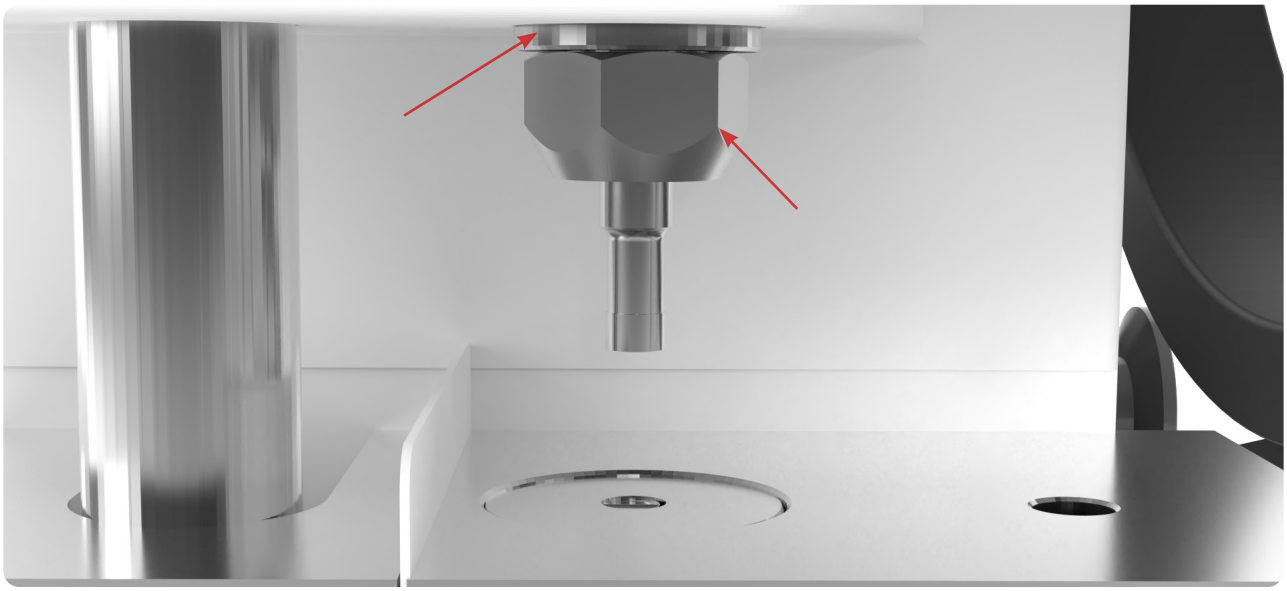

9. Remove the Upper Punch by hand.
    9.1 Note: If you cannot remove by hand, carefully use grippers or pliers.
10. Remove the Base Plate with the Die still inside it.
11. Remove the set screw that locks the Die with an Allen key.
12. Take out the Die from the middle of the Base Plate.
    12.1 Lightly tap the Die with a hammer if it is difficult to remove.

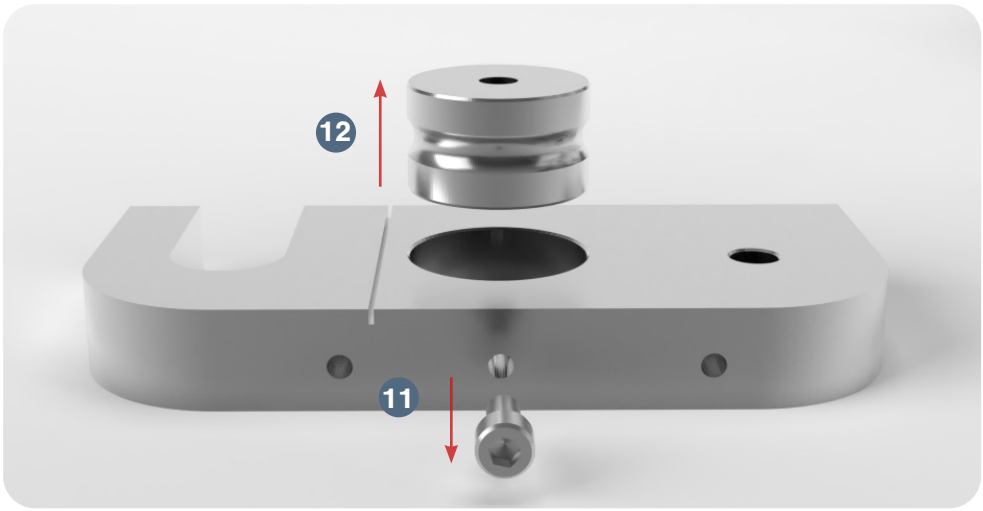

13. Remove the bolt that locks the Lower Punch with an Allen key.
14. Remove the Lower Punch by hand.
    14.1 Note: If you cannot remove by hand, carefully use grippers or pliers.

Note: To help ensure that the Die is inserted correctly, LFA recommends using an Insertion Ring. You can order the Die Seat Cleaner and Insertion Ring on our website at https://www.lfatabletpresses.com/die-seat-cleaner-insertion-ring

Replace the Tooling

15. Insert the new Lower Punch into the Lower Drift Pin Assembly.
16. Reinsert the bolt that locks the Lower Punch with an Allen key.
    16.1 Note: Make sure that the Lower Punch's “keyed” section is facing forward.

17. Place the Base Plate onto the TDP 6s® Base.
18. Insert the new Die into the middle of the Base Plate.
19. Reinsert the set screw that locks the Die with an Allen key.
    19.1 Note: Make sure the set screw is not fully tightened.

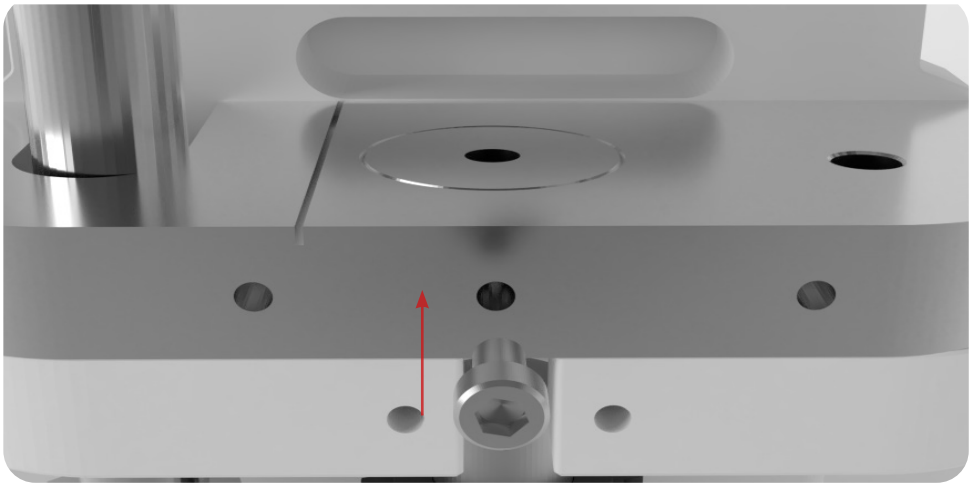

20. Insert the new Upper Punch into the Upper Drift Pin Assembly.
21. Tighten the Upper Punch Locking Nut onto the Upper Drift Pin Assembly with a wrench.

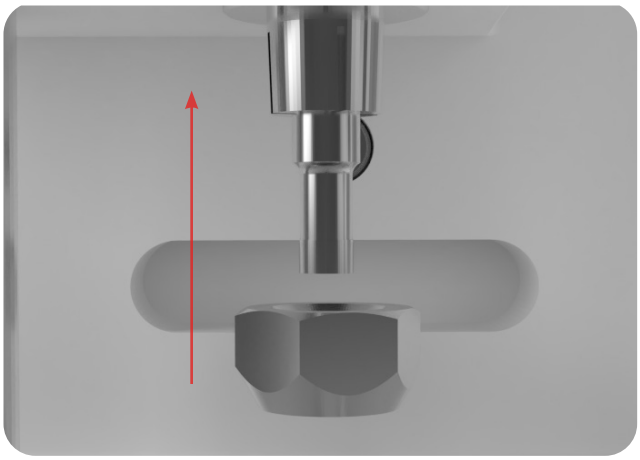

22. Rotate the Hand Wheel and carefully lower the Upper Punch into the Die.
    22.1 Note: To watch a video on proper Base Plate alignment, go to https://www.lfatabletpresses.com/videos/how-to-align-a-baseplate-on-a-tdp-5

23. Reinsert the Base Plate's bolts while the Upper Punch is still inside the Die.
    23.1 Note: The Die's set screw can be fully tightened now.
24. Position the Boot back on the Base Plate.
25. Insert the Boot Timing Bar's end in the Boot
26. Resecure the Boot Bolt and Spring underneath the Boot with an Allen key.
27. Tighten the Boot's set screw with an Allen key.
28. Reattach the Ejection Tray with an Allen key.
29. Reinsert the Hopper.
30. Turn the Hand Wheel for one rotation to ensure that the machine runs smoothly before plugging it in and turning it on.

Boot Timing Bar

This part can become warped from collision, and it is critical to the TDP 6s®'s operation. If you need to replace your TDP 6s®'s Boot Timing Bar, the process is quite simple.

Tools and Materials Needed

- Set of metric Allen keys with ball ends
- New Boot Timing Bar part
- Disposable latex/rubber gloves (for food grade products and to protect hands from grease)
- Hairnet and/or beard net (food grade products only)
- Sterile shoe covers (food grade products only)

WARNING: To prevent any potential personal injury, ALWAYS unplug the TDP 6s® from the electrical outlet when replacing parts.

Instructions

Note: Wear latex/rubber gloves (and appropriate food grade attire if applicable) during this process.

Remove the Boot Timing Bar

1. Remove the Hopper carefully and catch any powder still inside of it.
2. Loosen the Boot Timing Bar bolt with an Allen key.
3. Remove the Boot Timing Bar's end from the Boot.

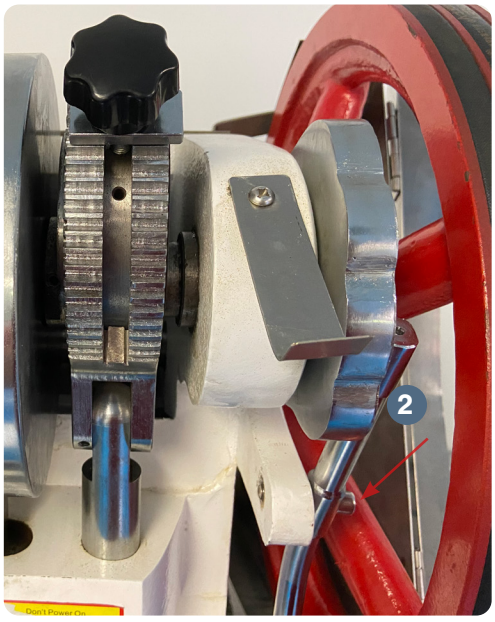

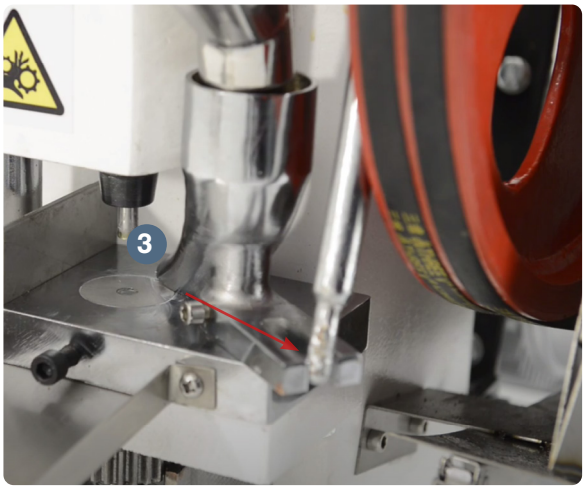

4. Remove the top part of Boot Timing Bar from the Boot Timing Cam.
    4.1 Note: To make removal easier, turn the Handle to rotate the Boot Timing Cam so you can easily access the Boot Timing Bar.
5. Remove the Boot Timing Cam Runner from the Boot Timing Bar by hand.
6. Remove the Boot Timing Bar from the Base Plate.

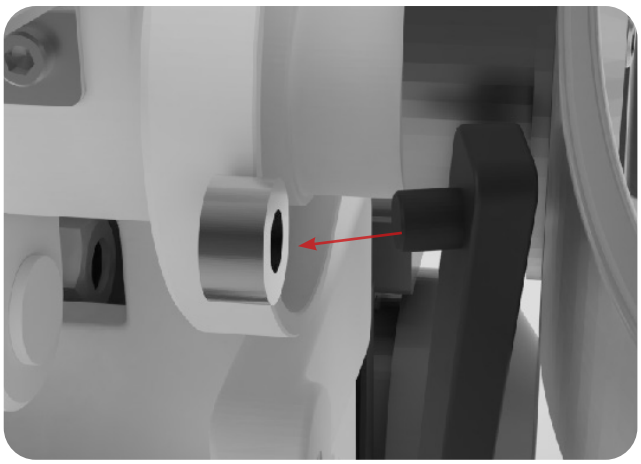

Replace the Boot Timing Bar

7. Place the Boot Timing Cam Runner on the new Boot Timing Bar.
8. Insert the new Boot Timing Bar with the runner into the side of the Boot Timing Cam.

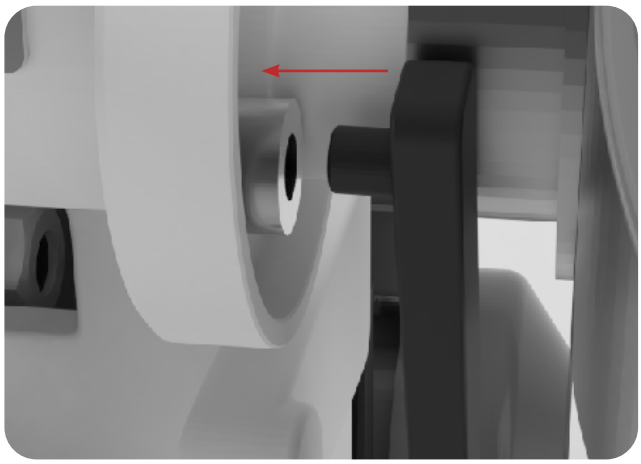

9. Insert the new Boot Timing Bar's end in the Boot
10. Tighten the Boot Timing Bar bolt with an Allen key.
11. Reinsert the Hopper.
12. Turn the Hand Wheel for one rotation to ensure that the machine runs smoothly before plugging it in and turning it on.

Boot

Due to its constant movement, the Boot can wear down and prevent granular material from flowing smoothly. Replacing this part is a simple process. To watch a video of Boot removal, go to https://www.lfatabletpresses.com/videos/how-to-remove-the-boot-timing-bar-on-a-tdp-5

Tools and Materials Needed

- Set of metric Allen keys with ball ends
- Crosshead screwdriver
- New Boot part
- Disposable latex/rubber gloves (for food grade products and to protect hands from grease)
- Hairnet and/or beard net (food grade products only)
- Sterile shoe covers (food grade products only)

WARNING: To prevent any potential personal injury, ALWAYS unplug the TDP 6s® from the electrical outlet when replacing parts.

Instructions

Note: Wear latex/rubber gloves (and appropriate food grade attire if applicable) during this process.

Remove the Boot

1. Remove the Hopper carefully and catch any powder still inside of it.
2. Remove the Ejection Tray with an crosshead screwdriver.

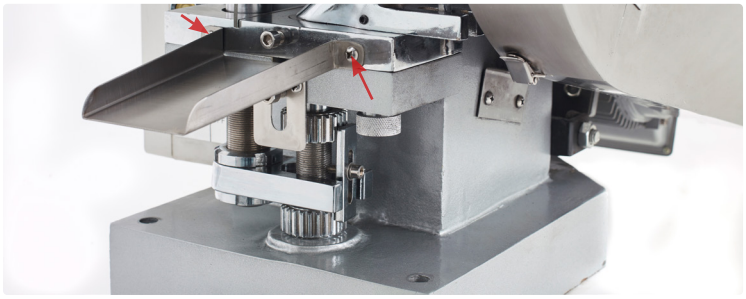

3. Loosen the Boot's set screw with an Allen key.

4. Remove the Boot Bolt and Spring underneath the Boot.

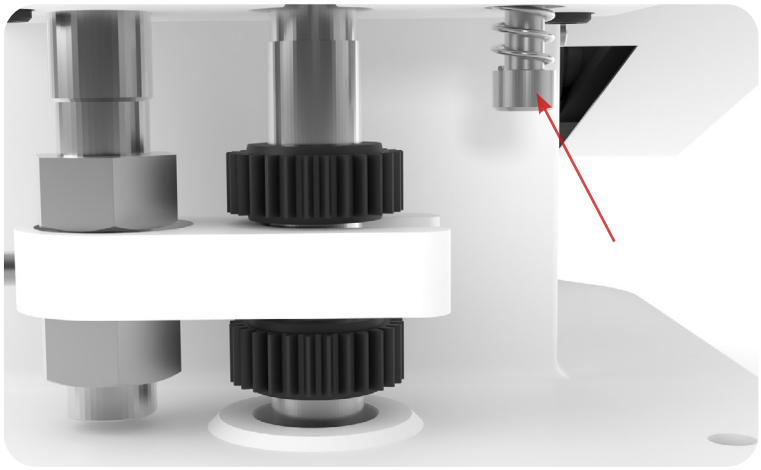

5. Take off the Boot carefully and remove any powder still inside it.

Replace the Boot

6. Position the new Boot on the Base Plate.
7. Insert the Boot Timing Bar's end in the new Boot.
8. Resecure the Boot Bolt and Spring underneath the new Boot with an Allen key.
9. Tighten the new Boot's set screw with an Allen key.
10. Reattach the Ejection Tray with an Allen key.
11. Reinsert the Hopper.
12. Turn the Hand Wheel for one rotation to ensure that the machine runs smoothly before plugging it in and turning it on.

V Belts

Although this part is rugged and long-lasting, after time it may become worn out and requires a replacement.

Tools and Materials Needed

- 19 mm wrench
- Set of new V Belts
- Disposable latex/rubber gloves (for food grade products and to protect hands from grease)
- Hairnet and/or beard net (food grade products only)
- Sterile shoe covers (food grade products only)

WARNING: To prevent any potential personal injury, ALWAYS unplug the TDP 6s from the electrical outlet when replacing parts.

Instructions

Note: Wear latex/rubber gloves (and appropriate food grade attire if applicable) during this process.

Remove the V Belts

1. Adjust the nuts on the Motor Support Arm with a 19 mm wrench to loosen the V Belts.
    1.1 Note: The closer the Motor Mounting Plate is to the TDP 6s®, the looser the V Belts' slack will be.

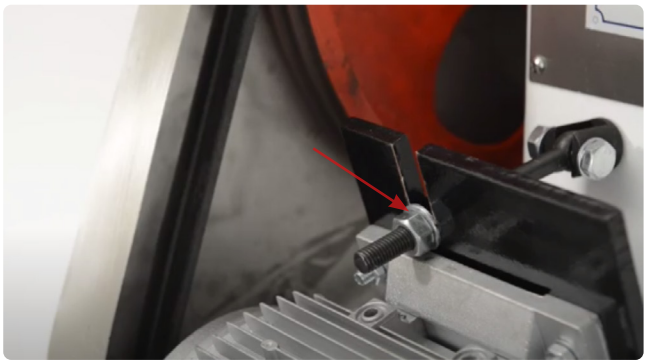

2. Remove the V Belts from the Drive Belt Pulley and the Hand Wheel.

Replace the V Belts

3. Place the new V Belts onto the Drive Belt Pulley and the Hand Wheel.

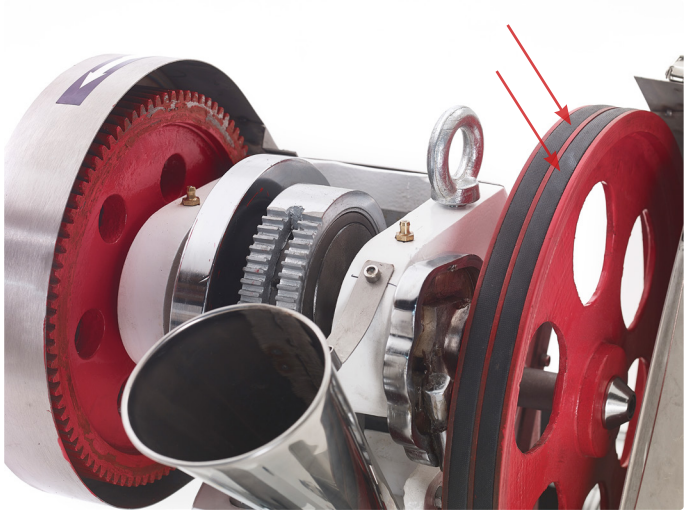

4. Adjust the nuts on the Motor Support Arm to tighten the V Belts.

    4.1 Note: The further away the Motor Mounting Plate is from the TDP 6s®, the tighter the V Belts' slack will be. The correct tension for new V Belts is [N] 138.71.

5. Turn the Hand Wheel for one rotation to ensure that the machine runs smoothly before plugging it in and turning it on.

Troubleshooting

Sometimes unavoidable issues will occur while operating the TDP 6s®. Fortunately, there are several methods to remedy these issues.

Common Machine/Part Issues

Symptom	Possible Cause	Possible Solution
Machine freezes or locks up	Grease point areas are dry.	Regularly oil and grease all the Grease Nipple points.
	There is excess pressure on the Upper Drift Pin Assembly.	Rotate the Upper Drift Pin Assembly counterclockwise.
	The V Belts are loose.	Adjust the Motor Support Arm's nuts to tighten the V Belts (correct tension is [N] 92.47).
	The press is being started with the Upper Punch at a low point.	Adjust the starting position so that the Upper Punch is at the highest point.
Knocking sounds coming from machine	The Upper Punch and Lower Punch are colliding with the Die.	After loosening its bolts, readjust the Base Plate until it is correctly aligned. After that, tighten the bolts back.
	The Upper Drift Pin Assembly is slightly off.	Loosen the Base Plate bolts and rotate the machine until the Upper Punch is aligned with the Die's bore. After that, tighten the bolts back.
	The V Belts are loose.	Adjust the Motor Support Arm's nuts to tighten the V Belts (correct tension for run-in belt is [N] 92.47).
	The teeth of the Pinion Gear and/or Cam Drive Cog are broken.	Replace the broken part.
	The Upper Drift Pin Assembly is not dropping smoothly in the powder filling stage of the process.	Check that there is not a buildup of powder between the Lower Punch and the Die. Then check that the Lower Drift Pin Assembly has enough clearance to drop through the hole in the Base.
Heavy resistance during production	The high friction areas are either unclean, locked, worn out, or not greased properly.	Apply grease to the Grease Nipple points and all high friction areas on the machine.

Symptom	Possible Cause	Possible Solution
Inability to compact materials to tablet form	Boot is blocked and not enough materials are flowing out.	Check the Boot for a potential clog.
	The Boot Timing Bar is not secured.	Tighten the Boot Timing Bar's nuts and bolt.
	There is not enough pressure.	Move down the Pressure Adjustment to lower the Upper Drift Pin Assembly and increase the punch pressure.
	The Lower Punch is broken.	Remove the Lower Drift Pin Assembly to access the broken Lower Punch. After removing it, replace the Tooling.
	The Lower Drift Pin Assembly is not dropping properly during filling.	Check that there is not a buildup of powder between the Lower Punch and the Die. Then check that the Lower Drift Pin Assembly has enough clearance to drop through the hole in the base.
	There are flowing issues with the mix.	If the machine is able to make tablets with LFA's Firmapress®, then the problem is your mix. Adjust your formulation. If still an issue, contact LFA for support.

Common Tablet Issues

Symptom	Possible Cause	Possible Solution
Double tablets	Previous tablet did not eject correctly.	Remove the double tablet manually from the Die bore.
	Excess granular materials were placed in the Die, which prevented the ejection of the existing tablet.	Clean the Tooling to remove any excess granular materials and make sure that it is clean and completely dry.
Cracked or broken tablets	There are problems with the formulation of the granules and ingredients.	If the machine is able to make tablets with LFA's Firmapress®, then the problem is your mix. Adjust your formulation. If still an issue, contact LFA for support.
	The Boot is not feeding enough material to be pressed in tablet form.	
	There is excess pressure.	Please read our article on Capping at https://www.lfatabletpresses.com/articles/tablet-capping
Shattered tablets	The Boot Timing Bar and the Boot are not adjusted properly.	Adjust the Boot Timing Bar by loosening/tightening its bolt and moving it.
	Air is becoming trapped in the tablet during compression.	Please read our article on Capping at https://www.lfatabletpresses.com/articles/tablet-capping
Inconsistent Tablet Weight	The Lower Drift Pin Assembly Locking Bar is loose.	Check that the Lower Drift Pin Assembly Locking Bar is secured to the Lower Drift Pin Assembly and the Lower Drift Pin Assembly Cogs.
	Not enough pressure is being exerted.	Move down the Pressure Adjustment to lower the Upper Drift Pin Assembly and increase the punch pressure.
	There are flowing issues with the mix.	If the machine is able to make tablets with LFA's Firmapress®, then the problem is your mix. Adjust your formulation. If still an issue, contact LFA for support.
Soft tablets	There is too little punch pressure.	Move down the Pressure Adjustment to lower the Upper Drift Pin Assembly and increase the punch pressure.
	There are flowing issues with the mix.	If the machine is able to make tablets with LFA's Firmapress®, then the problem is your mix. Adjust your formulation. If still an issue, contact LFA for support.
Uneven tablets	The Tooling is worn out.	Check the ingredients of your formula before you replace the Die, Upper Punch, and Lower Punch.

De-Jamming the TDP 6s®

There are several reasons why a TDP 6s® might jam such as:

- The fill depth is set too low and the pressure is set too high.
- There is a build up of powder sticking to the Tooling.
- Any powder buildup on the machine can cause tablets to eject backwards and not forwards, creating potential for a double tablet becoming stuck in the Die's bore.

Tools and Materials Needed

- Set of metric Allen keys with ball ends
- Disposable latex/rubber gloves (for food grade products and to protect hands from grease)
- Hairnet and/or beard net (food grade products only)
- Sterile shoe covers (food grade products only)

WARNING: To prevent any potential personal injury, ALWAYS unplug the TDP 6s® before de-jamming it.

Instructions

Note: Wear latex/rubber gloves (and appropriate food grade attire if applicable) during this process.

Run a Reverse Rotation

Note: Please refer to the Dismantling for Repair and Replacement section for additional assistance.

1. Remove the Hopper carefully and catch any powder that is inside of it.
2. Loosen the Boot's set screw with an Allen key.

3. Remove the Boot Bolt and Spring underneath the Boot.

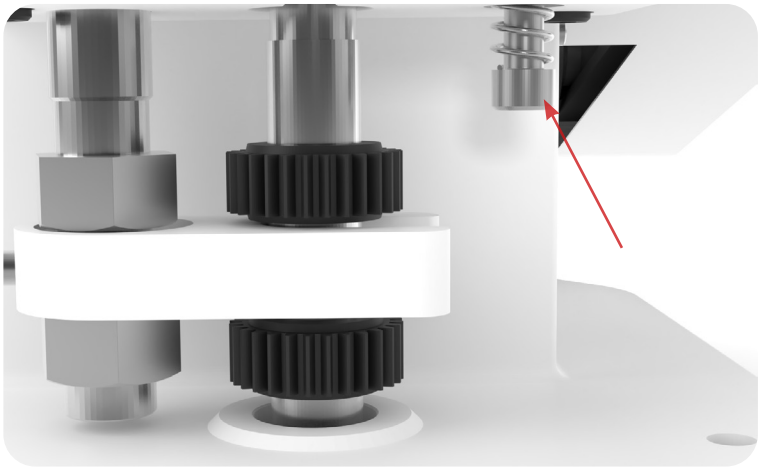

4. Take off the Boot carefully and remove any powder that is inside of it.
5. Turn the Hand Wheel in the reverse direction for a few rotations.

6. Position the Boot on the Base Plate.
7. Insert the Boot Timing Bar's end in the new Boot.
8. Resecure the Boot Bolt and Spring underneath the new Boot.
9. Tighten the Boot’s set screw with an Allen key.
10. Reattach the Ejection Tray with a crosshead screwdriver.
11. Reinsert the Hopper.
12. Turn the Hand Wheel for one rotation to ensure that the machine runs smoothly before plugging it in and turning it on.

Cleaning

During the TDP 6s®'s operation, excess powder will find its way into parts of the machine, particularly in the Base, Hopper, Boot, Base Plate, and Tooling. It is important to clean the TDP 6s® thoroughly to prevent rusting and cross contamination. To watch a video of a TDP 6s® cleaning, go to https://www.lfatabletpresses.com/videos/cleaning-your-tdp-5-tablet-press

LFA recommends that the machine be cleaned after each operation.

Tools and Materials Needed

- Cleaning brush
- Long wire pipe cleaner
- Toothbrush
- Cleaner (such as heavy duty foam cleaner; NSF approved if food grade product)
- Set of metric Allen keys with ball ends
- Set of metric wrenches
- Crosshead screwdriver
- Grippers or pliers (if parts are difficult to remove)
- Hammer (if Die is difficult to remove)
- Disposable latex/rubber gloves
- Bagless vacuum
- 3 clean cloths
- Potable water
- Bowl of warm soapy water (nothing abrasive)
- Sanitizer (e.g. Member's Mark Commercial Sanitizer)
- Hairnet and/or beard net (food grade products only)
- Safety goggles
- Sterile shoe covers (food grade products only)

WARNING: To prevent any potential personal injury, ALWAYS unplug the TDP 6s® from the electrical outlet when replacing parts.

Instructions

Note: Wear safety goggles and latex/rubber gloves (and appropriate food grade attire if applicable) during this process.

Remove Parts

1. Remove the Hopper carefully and catch any powder still inside it.
2. Remove excess powder and any tablets from the Ejection Tray with a cleaning brush.
3. Remove the Ejection Tray with an crosshead screwdriver.

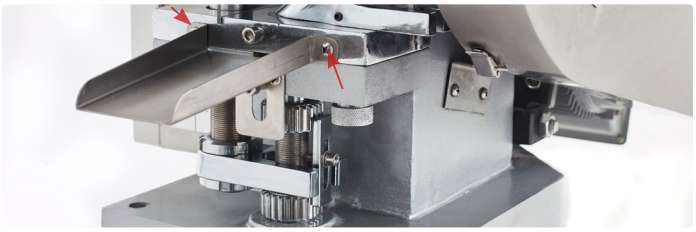

4. Loosen the Boot's set screw with an Allen key.

5. Remove the Boot Bolt and Spring underneath the Boot.

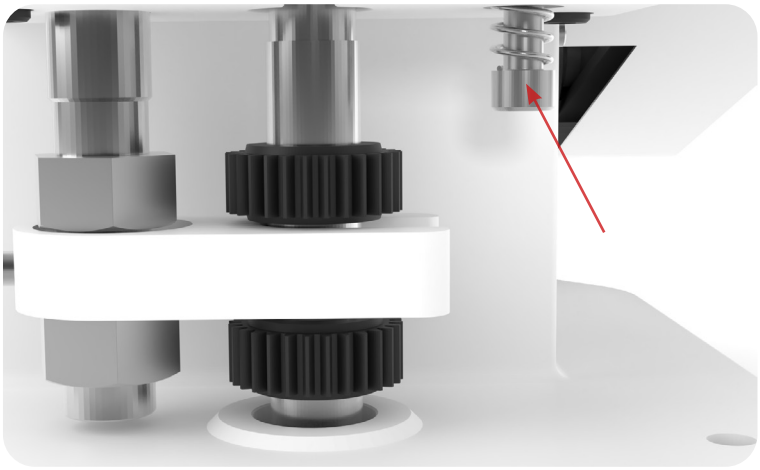

6. Take off the Boot carefully and remove any powder still inside it.
7. Loosen the bolts underneath the Base Plate with an Allen key.

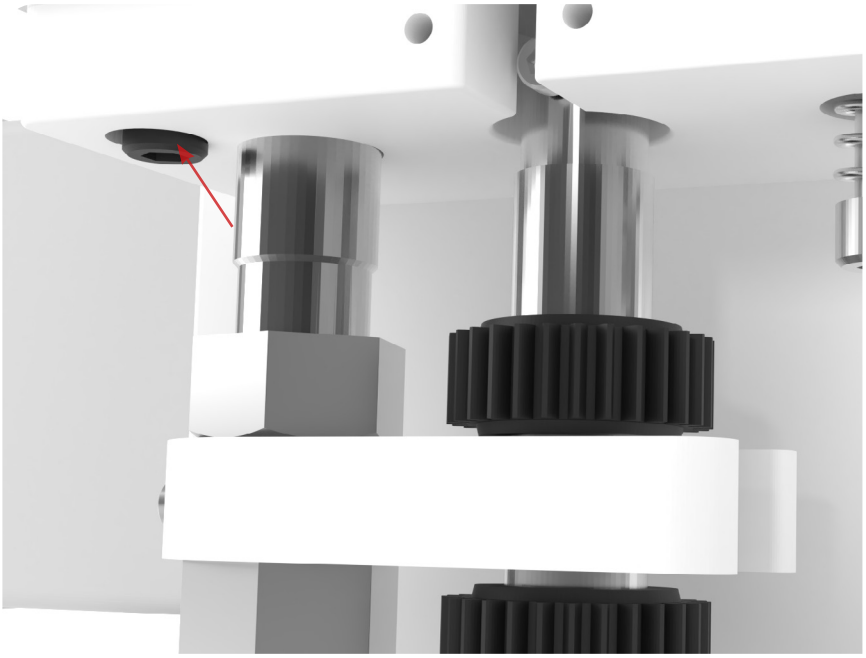

8. Turn the Hand Wheel until the Upper Drift Pin Assembly is lowered.
9. Loosen the Upper Punch Die Locking Nut with a wrench while keeping the Upper Punch Drift Assembly in place with another wrench.

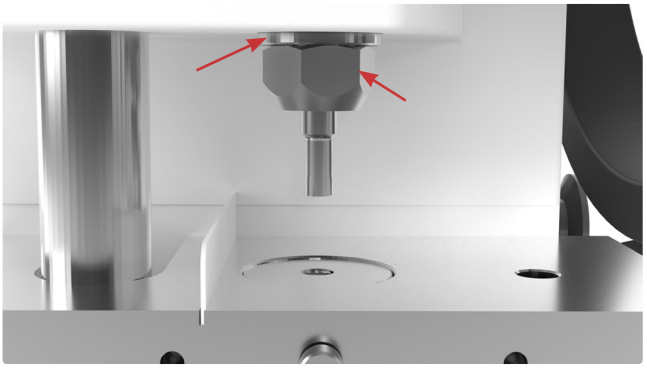

10. Remove the Upper Punch by hand.
    10.1 Note: If you cannot remove by hand, carefully use grippers or pliers.

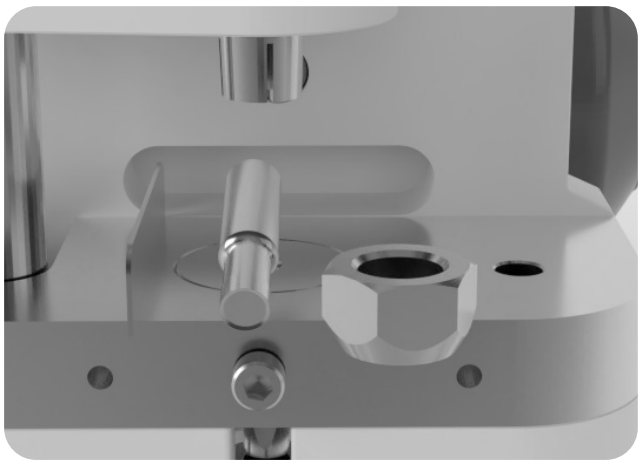

11. Remove the Base Plate with the Die still inside it.
12. Remove the bolt that locks the Die with an Allen key.
13. Take out the Die from the middle of the Base Plate.
    13.1 Note: Lightly tap the Die with a hammer if it is difficult to remove.

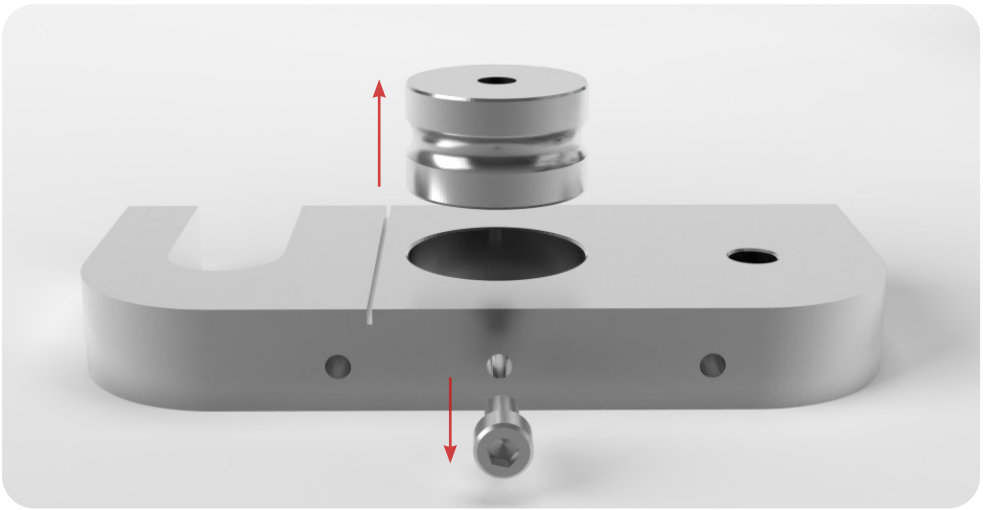

14. Remove the bolt that locks the Lower Punch with an Allen key.
15. Remove the Lower Punch by hand.
    15.1 Note: If you cannot remove by hand, carefully use grippers or pliers.

Clean the Base

16. Vacuum any powder/debris from the machine.
17. Spray the TDP 6s® Base with the cleaner, particularly in the Tooling's location.
18. Rinse the cleaner off with potable water.
19. Sanitize the TDP 6s® Base with a clean cloth.

Note: Before washing the Base Plate, LFA recommends using our Die Seat Cleaner. You can order the Die Seat Cleaner and Insertion Ring on our website at https://www.lfatabletpresses.com/die-seat-cleaner-insertion-ring

Clean the Parts

20. Take one of the parts removed from the machine and submerge it in the bowl of warm soapy water.
    20.1 Note: To ensure that all dirt and debris are removed, wash one part at a time.
21. Take a clean cloth and carefully wash the part thoroughly.
    21.1 Note: Use the toothbrush for difficult-to-remove debris. When cleaning tooling, use non-abrasive cleaning equipment such as a soft pipe cleaner and soft cloth.
22. Dry part immediately after it is cleaned and rinsed.
23. Sanitize part with a clean cloth.
24. Repeat steps 20-23 for each remaining part until they are all clean.

Cleaning Schedule Matrix

Part	Frequency							
	After installing machine	After every use	Before every use	In between products that present a cross contamination risk	Weekly	Monthly	Before placing In storage	After removing from storage
Ejection Tray	Remove from machine	Remove from machine	Install on machine	Remove from machine	N/A	N/A	Remove from machine	Install on machine
Tooling	Remove from machine	Remove from machine	Install into machine	Remove from machine	N/A	N/A	Remove from machine	Install on machine
Boot	Remove from machine	Remove from machine	Install into machine	Remove from machine	N/A	N/A	Remove from machine	Install on machine
Base Plate	Remove from machine	Remove from machine	Install on machine	Remove from machine	N/A	N/A	Remove from machine	Install on machine
Hopper	Remove from machine	Remove from machine	Install on machine	Remove from machine	N/A	N/A	Remove from machine	Install on machine
Top Cam area	Clean in machine	Clean in machine	Clean in machine	Clean in machine	Clean in machine	Clean in machine	Clean in machine	Clean in machine
Upper Drift Pin Assembly	Remove from machine	Remove from machine	Remove from machine	Remove from machine	Remove from machine	Remove from machine	Remove from machine	Remove from machine
Motor	Clean on machine	Clean in machine	Clean in machine	N/A	Clean on machine	Clean in machine	Clean on machine	Clean on machine
Upper Drift Pin Assembly Threaded Cam	Clean in machine	Clean in machine	Clean in machine	Clean in machine	Clean in machine	Clean in machine	Clean in machine	Clean in machine
Lower Drift Pin Assembly	Remove from machine	Remove from machine	Remove from machine	Remove from machine	Remove from machine	Remove from machine	Remove from machine	Remove from machine
Electrical Drive Flywheel	Clean on machine	Clean in machine	Clean in machine	Clean in machine	N/A	Clean on machine	Clean on machine	Clean on machine
Base/Frame	Clean on machine	Clean in machine	Remove from machine	Remove from machine	N/A	N/A	Clean in machine	Clean on machine

Cleaning Level Key
Level 1 - Remove powder
Level 2 - Dry clean with cloth
Level 3 - Dry clean and re-lubricate if specified in lubrication schedule
Level 4 - Wet clean and re-lubricate if specified in lubrication schedule
Remove from machine - Take part out of machine and clean if required. Store it correctly or install back into machine.
Install into machine - Install part into the machine and make sure that it has been cleaned. If needed, lubricate to the level required.
Clean on/in machine - Clean the part while in the machine and do not remove it. Make sure that all contact surfaces are clean to the level required.

This cleaning matrix is intended as a guide only and is not an exhaustive list. All cleaning schedules will need to be adapted to the industry and product, following industry regulations and the material safety data sheets that come with specific products. Please check with your Food Safety Manager/Department, Quality Control Manager/Department, or other relevant internal departments at your company before using.

Storing the TDP 6s®

After its thorough cleaning, the TDP 6s® needs to be stored in the proper conditions. It is important to store it in an environment in which the machine is safe from rusting. The TDP 6s®'s high traction areas and the Tooling need to be lubricated separately before you store them.

Tools and Materials Needed

- Plastic wrapping to cover machine
- Airtight container for Tooling (if in storage for more than a week)
- Grease gun
- Lubricant/grease (food grade lubricant if machine has a high chance of contact with the food or drug product)
- Disposable latex/rubber gloves (for food grade products and to protect hands from lubricant)
- Hairnet and/or beard net (food grade products only)
- Sterile shoe covers (food grade products only)

Instructions

Note: Wear latex/rubber gloves (and appropriate food grade attire if applicable) during this process.

Lubricating the Tooling

If you are not using the machine for more than a week, store the Tooling in an airtight container and cover it with lubricant to prevent rust formation. If not, simply lubricate each part of the Tooling and reinsert it back into the machine.

LFA's TDP® Tooling Case provides airtight storage and is perfect for transport and protection. Order at https://www.lfatabletpresses.com/tooling-case-tdp

1. Rub a finger's worth of grease on the Boot Timing Cam's side.
    1.1 Note: Be sure to lubricate the Boot Timing Cam Runner.

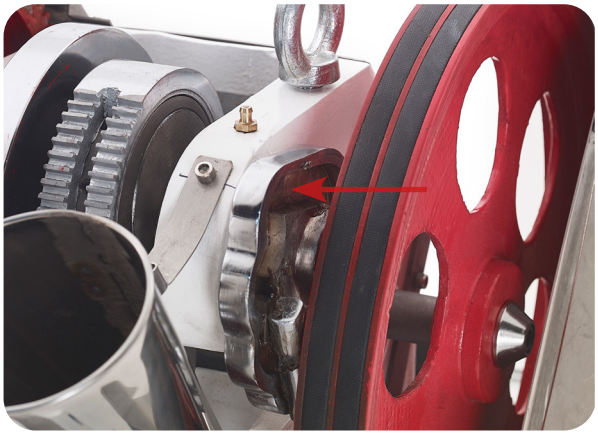

2. Lubricate the Top Cam Drive Shaft's Grease Nipples with the grease gun.

2.1 Note: Rotate the Hand Wheel during this to ensure grease gets in.

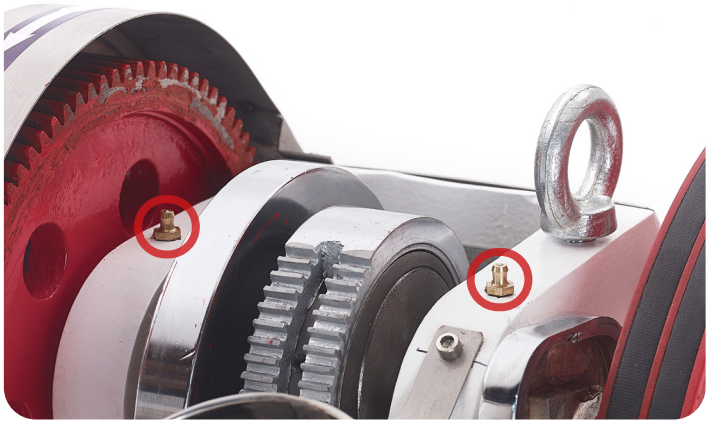

3. Lubricate the Cam Drive Cog's Pinion Gear and the Top Cam Drive Shaft Grease Nipples.

You can also lubricate any point of traction the TDP 6s® at your own discretion; just be sure not to over-lubricate.

Cover the TDP 6s®

4. Carefully cover the TDP 6s® with the plastic wrapping.

4.1 Note: You can use the plastic wrapping that came with the machine in the shipping container.

Appendix

Glossary

Term	Definition
API/Active Pharmaceutical Ingredient	Any substance or mixture of substances used that is an active ingredient in the drug product.
Binding agent	See excipient.
Die	The part of the Tooling that makes up the hole in which the powder is compressed and shaped into a tablet.
Die bore	The cavity inside the middle of the Die.
Die face	The very top flat surface of the Die.
Ejection height	The height at which the Lower Punch is lifted to for a tablet's ejection from the machine.
Excipient	A substance formulated alongside the API that acts as a binding agent in the tablet powder.
Fill depth	The amount of space that the powder can flow into in the Die.
Formulation	Powder mix of the excipient and the API that is compressed to make tablets.
Granular material	See Formulation.
Kilonewton (kN)	The force to accelerate a mass of 1 kg at a constant 1 m per second. The TDP® range's pressure is measured in this unit.
Punches	The Upper Punch and Lower Punch have concave endings in the shape of the desired tablet. When the punches meet, they compress the powder between.
Punch pressure	The adjustable amount of force that is used to press tablets.
TDP®	LFA trademarked term for desktop tablet press.
Tooling	Enables a tablet press to form tablets. It consists of a Die, Upper Punch, and Lower Punch.

Description of TDP 6s® Parts

Tooling
The Tooling consists of the Die, the Upper Punch, and the Lower Punch. This die set compresses the powder into the tablet. Order at https://www.lfatabletpresses.com/tdp-tooling

Lower Drift Pin Assembly Cogs (#AEC0012)
The Lower Drift Pin Assembly Cogs are used to adjust the tablet's fill depth and ejection height. They are located in the Lower Drift Pin Assembly. The Upper Cog adjusts the ejection height of the tablet. Turning it counterclockwise raises the ejection height, and turning it clockwise lowers it. The Lower Cog increases the tablet's fill depth (weight). Turning it clockwise increases the weight of the tablet, and turning it counterclockwise decreases the weight. Order at https://www.lfatabletpresses.com/tdp6s-lower-pin-cogs

Lower Drift Pin Assembly Locking Bar (#AEC0013)
The Lower Drift Pin Assembly Locking Bar holds the Lower Drift Pin Assembly Cogs in place. Order at https://www.lfatabletpresses.com/tdp6s-lower-pin-locking-bar

Boot (#AEC0036)
The Boot is where the dry granular materials are held for pressing. It fills the Die bore with the dry granular material and moves the finished tablet out of the Die before refilling it with the next batch of materials. Order at https://www.lfatabletpresses.com/tdp6s-boot

Hopper (#AEC0030)
The Hopper is the funnel that holds the granular materials before it moves into the Boot to be pressed. Order at https://www.lfatabletpresses.com/tdp6s-hopper

Boot Bolt and Spring (#AEC0051)
The Boot Bolt and Spring holds the Boot in place while the press is running and allows it to move back and forth. It is kept secure with the set screw on the side of the Boot. Order at https://www.lfatabletpresses.com/tdp6s-boot-bolt-spring

Upper Drift Pin Assembly (#AFC0002)
The Upper Drift Pin Assembly holds the Upper Punch in place. It is attached to the Eccentric Sheave. Order at https://www.lfatabletpresses.com/tdp6s-upper-drift-pin-assembly

Eccentric Sheave Inner Strap (#AFC0032)
The Eccentric Sheave Inner Strap attaches the Upper Drift Pin Assembly to the Top Cam Drive Shaft. Order at https://www.lfatabletpresses.com/tdp6s-eccentric-inner-sheave-strap

Eccentric Sheave Strap/Pressure Adjustment (#AFC0004)
The Eccentric Sheave Strap/Pressure Adjustment allows the Upper Drift Pin Assembly to be moved up and down to adjust the punch pressure. Order at https://www.lfatabletpresses.com/tdp6s-eccentric-sheave-strap

Top Cam Drive Shaft (#AFC0037)
All other TDP 6s® parts are connected to the Top Cam Drive Shaft. As it is turned, all the parts of TDP 6s® move. Order at https://www.lfatabletpresses.com/tdp6s-top-cam

Grease Nipples
Grease Nipples are grease cap points that grease the TDP 6s®'s gaps with high pressure. Order at https://www.lfatabletpresses.com/tdp6s-grease-nipple

Boot Timing Cam (#AFC0038)
The Boot Timing Cam is responsible for the movement of the Boot Timing Bar, which allows the Boot to fill the Die bore with the dry granular materials needed to form the tablet. Order at https://www.lfatabletpresses.com/tdp6s-boot-timing-cam

Eccentric Sheave (#AFC0033)
The Eccentric Sheave controls the timing of the Upper Drift Pin Assembly. Order at https://www.lfatabletpresses.com/tdp6s-eccentric-sheave

Lower Drift Pin Assembly Timing Rod (#AFC0014)
The Lower Assembly Timing Rod raises the finished tablet out of the Die. Order at https://www.lfatabletpresses.com/tdp6s-lower-assembly-timing-rod

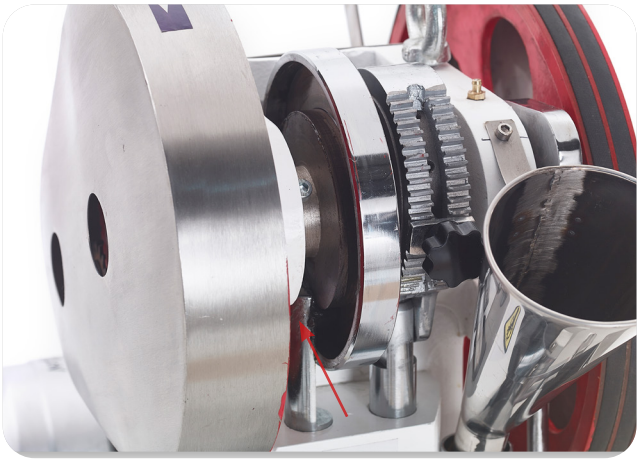

Lower Drift Pin Assembly (#AEC0011)
The Lower Drift Pin Assembly is located below the base of the tablet. It holds the Lower Punch in place in the Die while the Upper Punch pushes down to form the tablet in the middle. Order at https://www.lfatabletpresses.com/tdp6s-lower-pin-assembly

Boot Timing Drive Bar Runner (#AEC0020)
The Boot Timing Cam Runner is a round section that connects the Boot Timing Cam to the Boot Timing Bar, which keeps the timing. Order at https://www.lfatabletpresses.com/tdp6s-boot-drive-runner

Cam Drive Cog (#AFC0050)
The Cam Drive Cog is attached to the Top Cam Drive Shaft and drives the Lower Drift Pin Assembly Timing Rod. Order at https://www.lfatabletpresses.com/tdp6s-fly-wheel

Pinion Gear (#AFC0022)
The Pinion Gear amps up the Motor's torque to get the maximum amount of force available. Order at https://www.lfatabletpresses.com/tdp6s-fly-wheel-cap

Electric Motor (#AFC0042)

The Electric Motor is mounted at the back of the TDP 6s® Base and can be either 110 v or 220 v. Order at https://www.lfatabletpresses.com/tdp6s-motor

Boot Timing Bar (#AFC0018)

The Boot Timing Bar moves the Boot and is timed by the Boot Timing Cam track. The rocking motion that the arm provides helps the Boot to fill the Die bore with the dry granular material for the next tablet. Order at https://www.lfatabletpresses.com/tdp6s-boot-timing-bar

Lower Drift Pin Assembly Lifting Bar (#AFC0034)

The Lower Drift Pin Assembly Lifting Bar lifts the Lower Drift Pin Assembly that holds the Lower Punch and helps push the tablets out of the Die. Order at https://www.lfatabletpresses.com/tdp6s-lower-pin-lifting-bar

Base Plate (#AFC0008)

The Base Plate is not only the mount for the Boot, but also holds the Die in place. Order at https://www.lfatabletpresses.com/tdp6s-base-plate

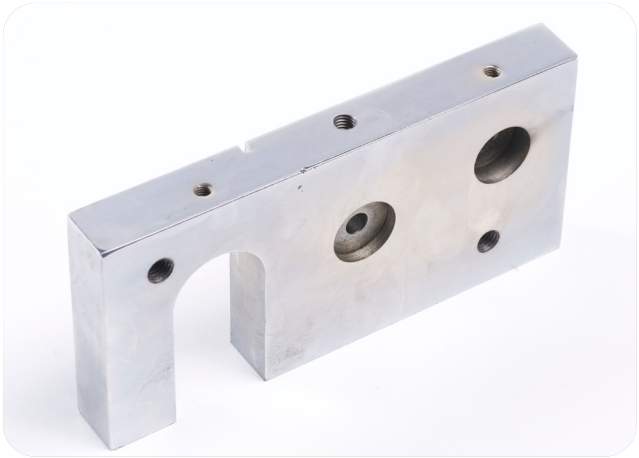

Drive Belt Pulley (#AFC0059)
This Drive Belt Pulley fixes on the Motor's keyed axel and has grooves that the V Belts fits into. The V Belts are also connected to the Hand Wheel. Order at https://www.lfatabletpresses.com/tdp6s-drive-belt-pulley

Ejection Guard (#AFC0009)
The Ejection Guard rests in a groove on the Base Plate between the Lower Drift Pin Assembly Timing Rod and the Die. Order at https://www.lfatabletpresses.com/tdp6s-ejection-guard

Ejection Tray (#AEC0049)
The Ejection Tray aids with the ejection of finished tablets. Order at https://www.lfatabletpresses.com/tdp6s-ejection-tray

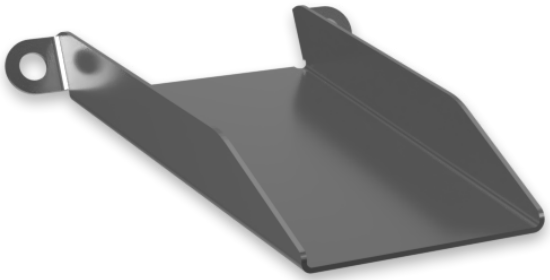

Electrical Box and Connecting Cables (#AEC0053)
The Electrical Box has the On/Off buttons, which are connected to the motor and an electrical plug via cables. Order at https://www.lfatabletpresses.com/tdp6s-electrical-box-wires

Motor Mounting Plate (#AFC0039)
The Motor Mounting Plate is hinged and connects the Motor to the TDP 6s® Base. It can be moved to adjust the tension of the V Belts. Order at https://www.lfatabletpresses.com/tdp6s-motor-mounting-plate

V Belts (Drive Belt) (#H108013038)
The V Belts connects the Motor to the TDP 6s®'s running parts. Order at https://www.lfatabletpresses.com/tdp6s-v-belt-drive-belts

Hopper Holder
The Hopper Holder is a small bar that secures the Hopper in place. Order at https://www.lfatabletpresses.com/tdp6s-hopper-holder

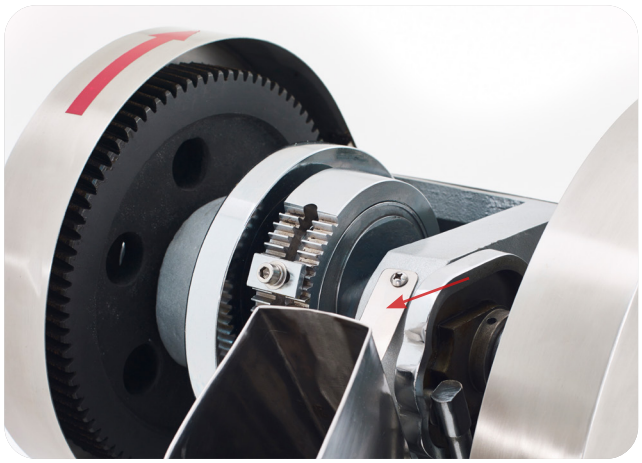

Lower Drift Pin Assembly Locking Bar (#AFC0031)

The Lower Drift Pin Assembly Locking Bar holds the Lower Drift Pin Assembly Cogs in place. Order at https://www.lfatabletpresses.com/tdp6s-lower-pin-locking-bar

Pressure Adjustment Knob (#AFC0063)

The Pressure Adjustment Knob is located on the Pressure Adjustment. Once it is loosened, it can be moved up or down to adjust the punch pressure. Order at https://www.lfatabletpresses.com/pressure-adjustment-knob-tdp6s

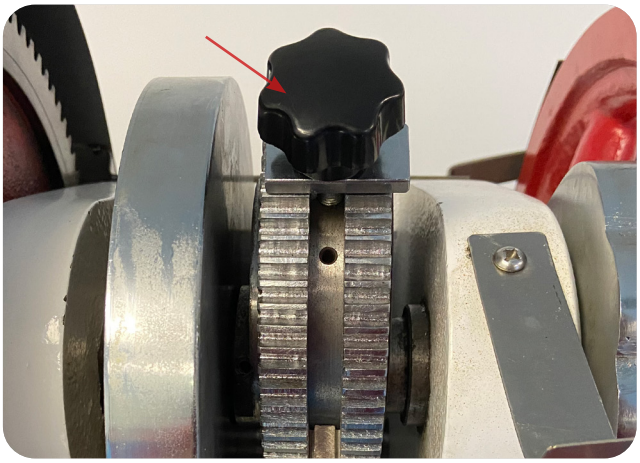

Hand Wheel (#AFC0058)

The Hand Wheel can be used to turn over the TDP 6® manually. Order at https://www.lfatabletpresses.com/tdp6s-drive-wheel

Material of Contact Parts

Contact Part	Material
Boot	Copper coat CR
Base Plate	A3 steel coat CR
Tooling (Upper Punch, Lower Punch, and Die)	User specified
Ejection Tray	SUS304 stainless steel
Hopper	SUS304 stainless steel

Technical Specifications

Number of dies	1
Max production capacity	3000/hour
Max diameter of tablet	22 mm
Max thickness of tablet	6 mm
Max fill depth	16 mm
Max pressure	60 kN
Number of filling stations	1
Double layered tablet	No
Motor power	0.75 kW
Number of phase	1
Amps	13 A
Volts	240 V (110 V on request)
Overall size	890 mm x 500 mm x 880 mm
Weight	150 kg (330 lbs)

Maintenance Checklist

Before Operation	
☐	Visually inspect the tablet press and the parts.
☐	Ensure all locking nuts are tight.
☐	Visually inspect grease nipples and regrease where necessary.
☐	Tune the tablet press by hand to get the tablet size and weight correct.
☐	Manually operate the machine for at least two full rotations to ensure it is not jammed.
During Operation	
☐	Listen for irregular knocking or clicking sounds. If heard, stop operation and lubricate the desktop press.
☐	Watch for buildup of powder in front of the Boot. If occurring, either (a) make mix more granular, (b) check the Boot's base for damage, or (c) clear the buildup with a paintbrush.
☐	Occasionally check the Motor's temperature. If it starts to overheat, turn off the machine, let it cool down, and grease it to ensure smooth operation.
☐	Ensure that the Hopper does not run out of powder.
☐	Weigh a sample tablet and test for its hardness.
After Operation	
☐	Unplug machine and remove all excess powder with a bagless vacuum.
☐	Remove the Boot and the Tooling and clean the inside of the tablet press.
☐	Wipe down the other surfaces with a damp cloth.
☐	Apply a layer of food grade grease to the entire desktop tablet press.
☐	Lubricate all grease nipples.
☐	Store Tooling in an air-tight box with a small amount of grease.

TDP 6s® Tooling Dimensions

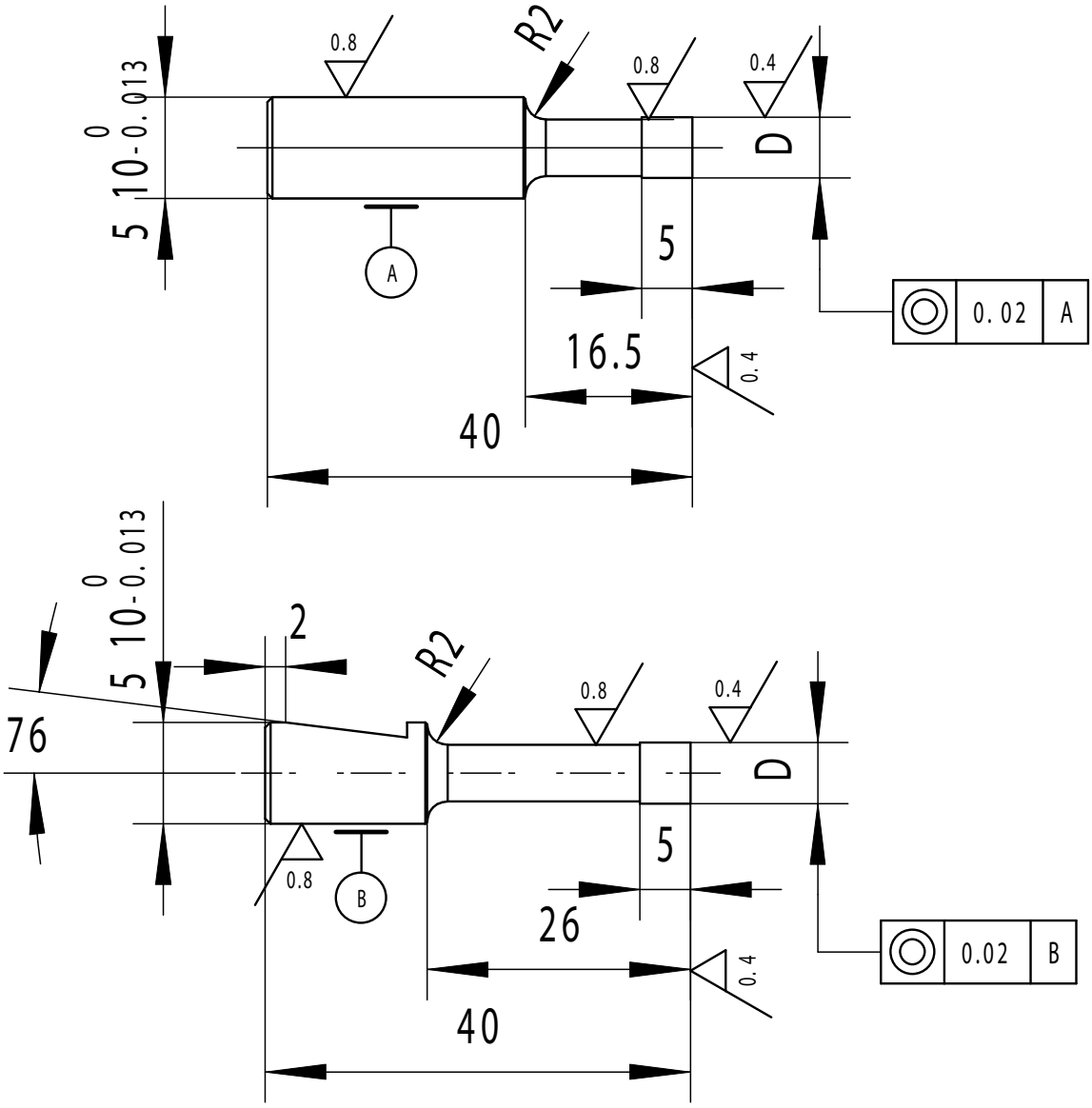

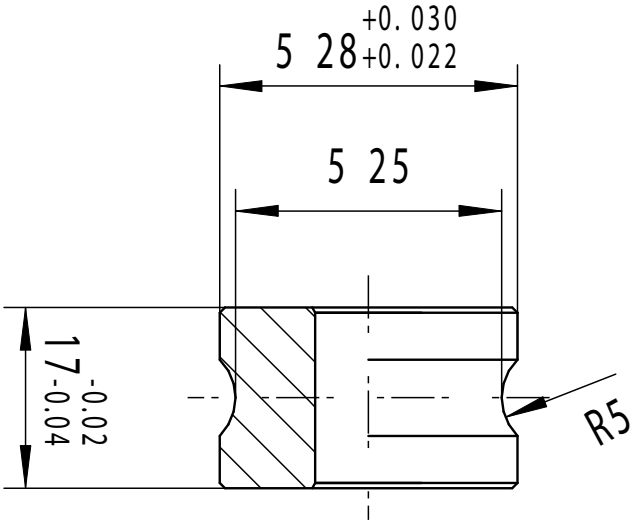

TDP 6s® Mounting Diagram

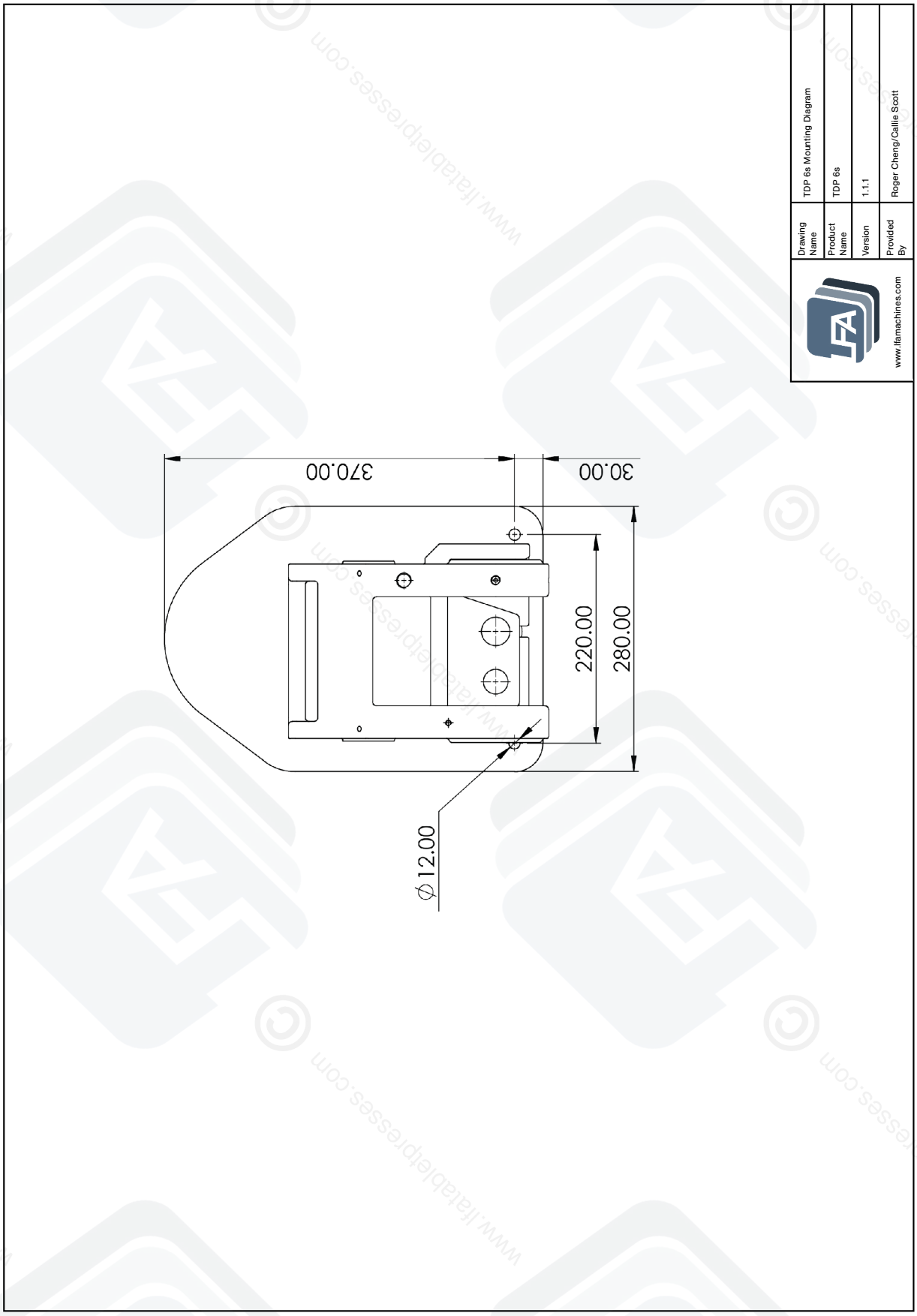

TDP 6s® Exploding Diagram

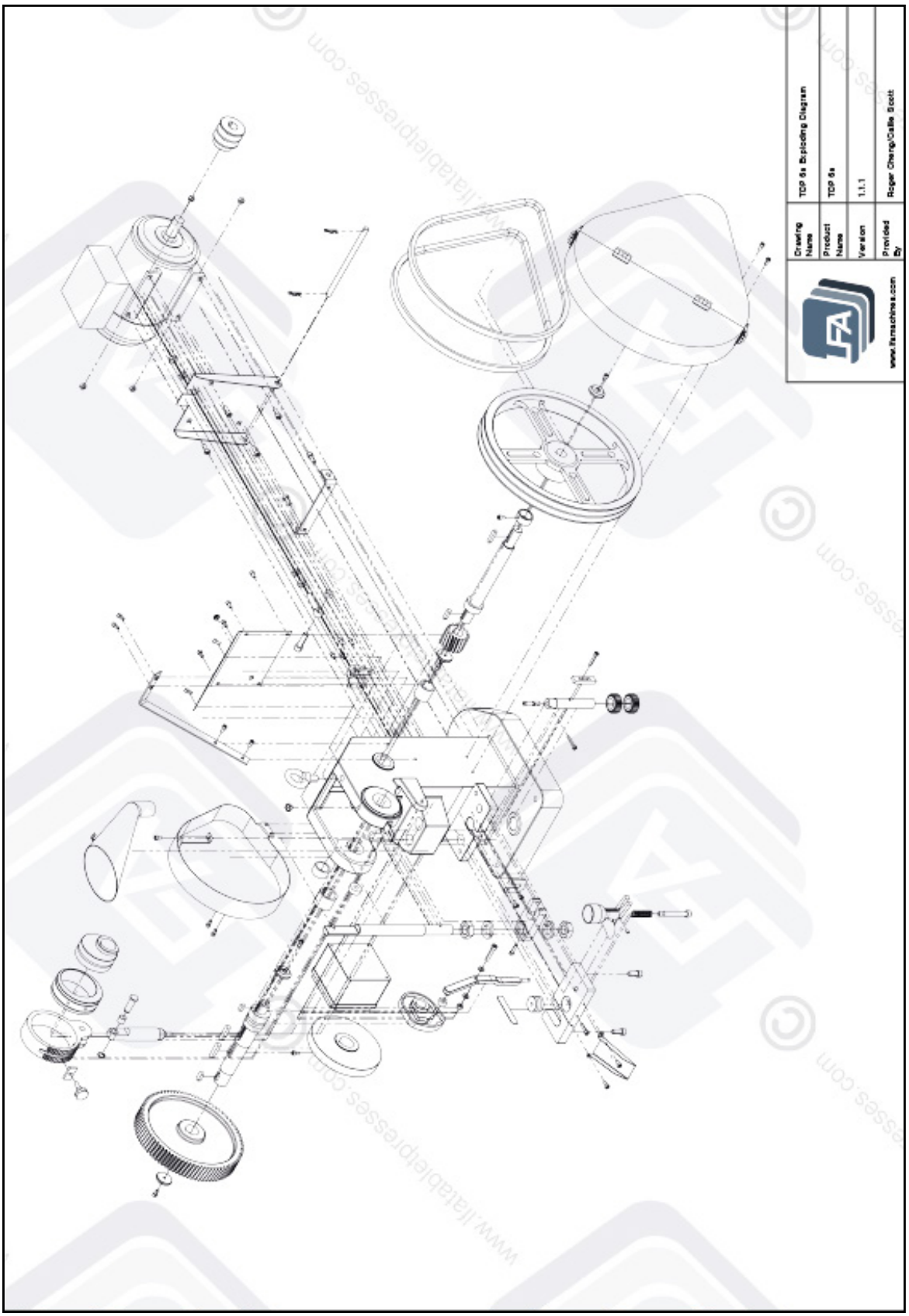

TDP 6s® Dimensions

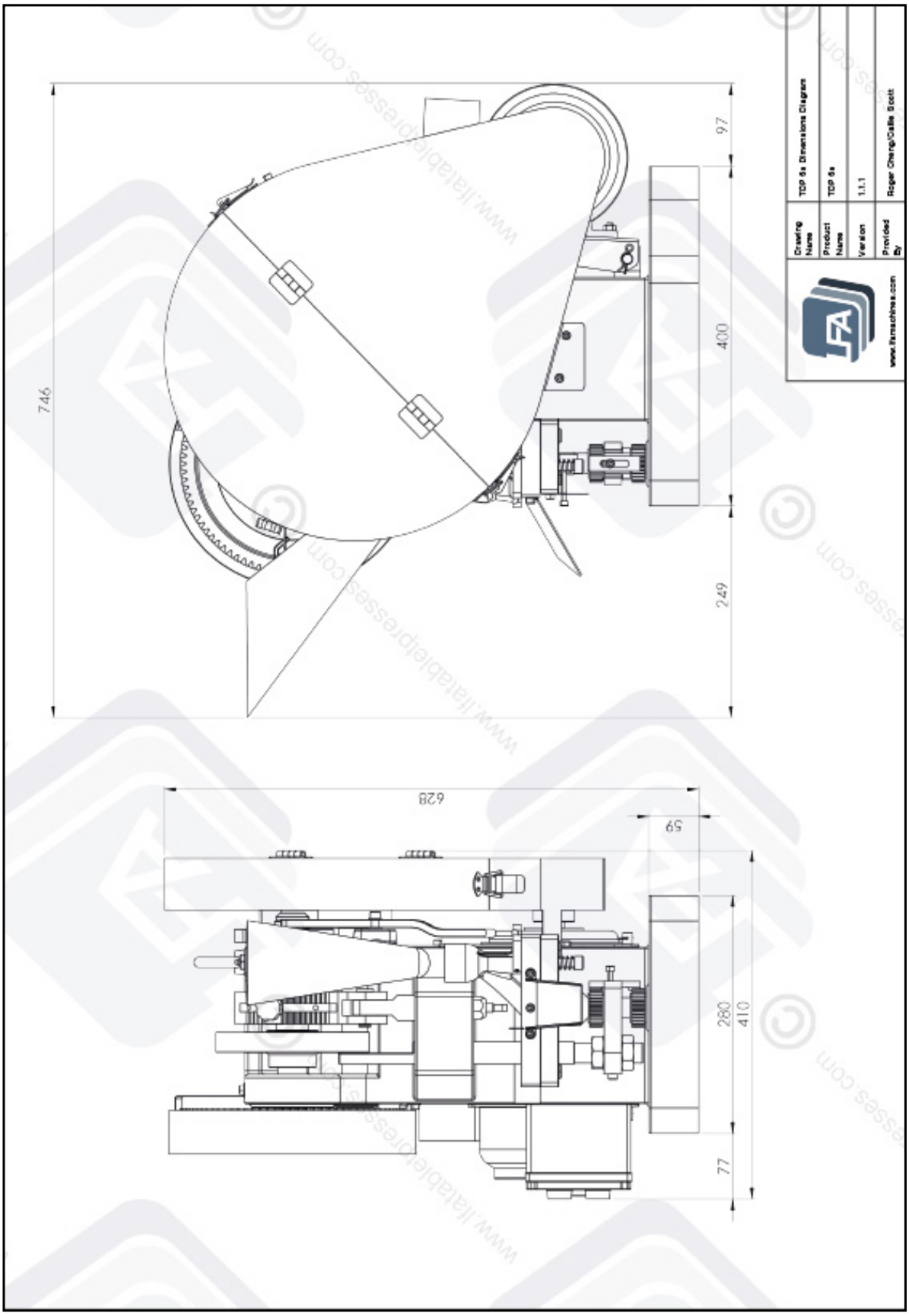

TDP 6s® Sub-Assemblies of Parts

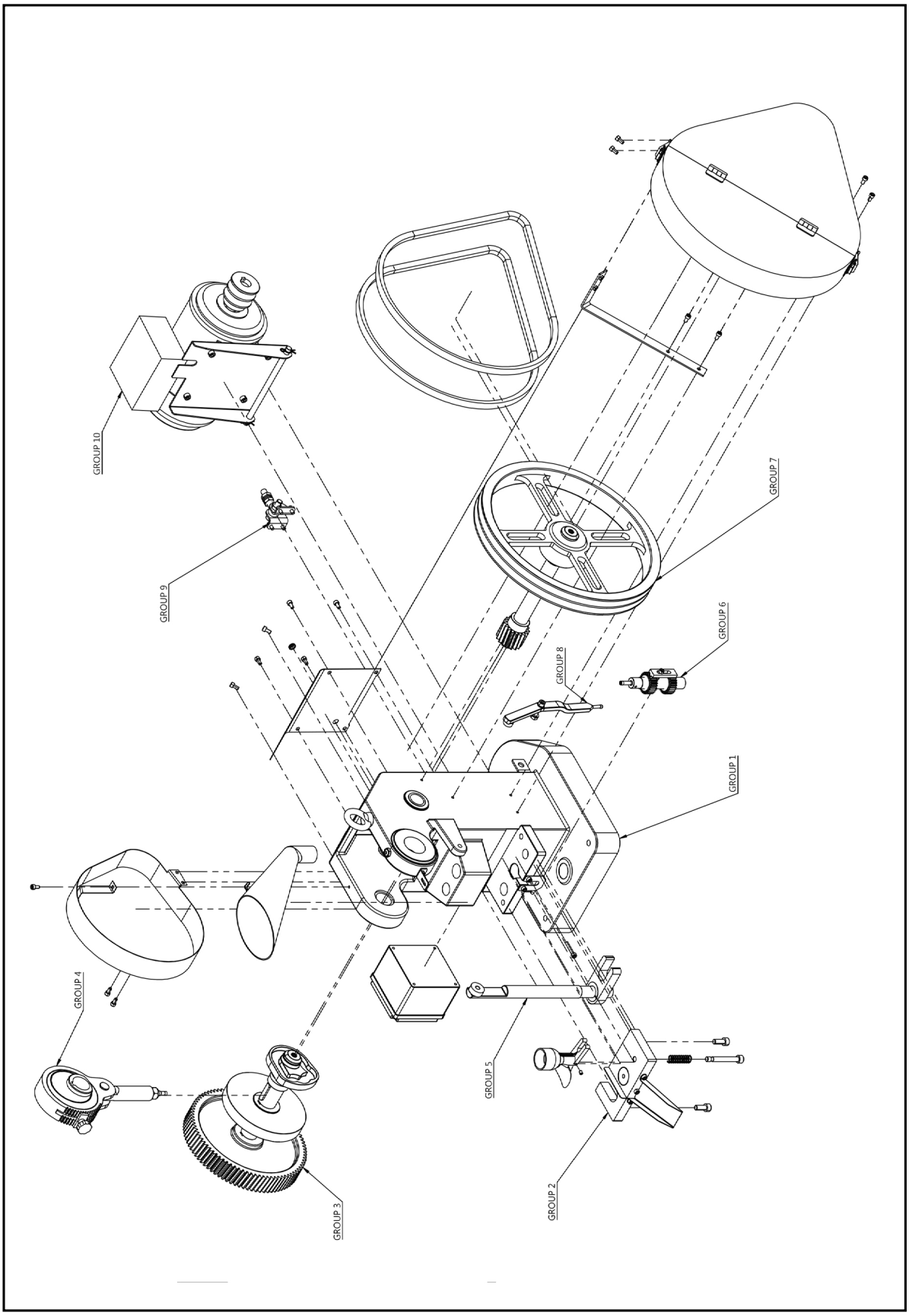

TDP 6s® Sub-Assemblies of Parts

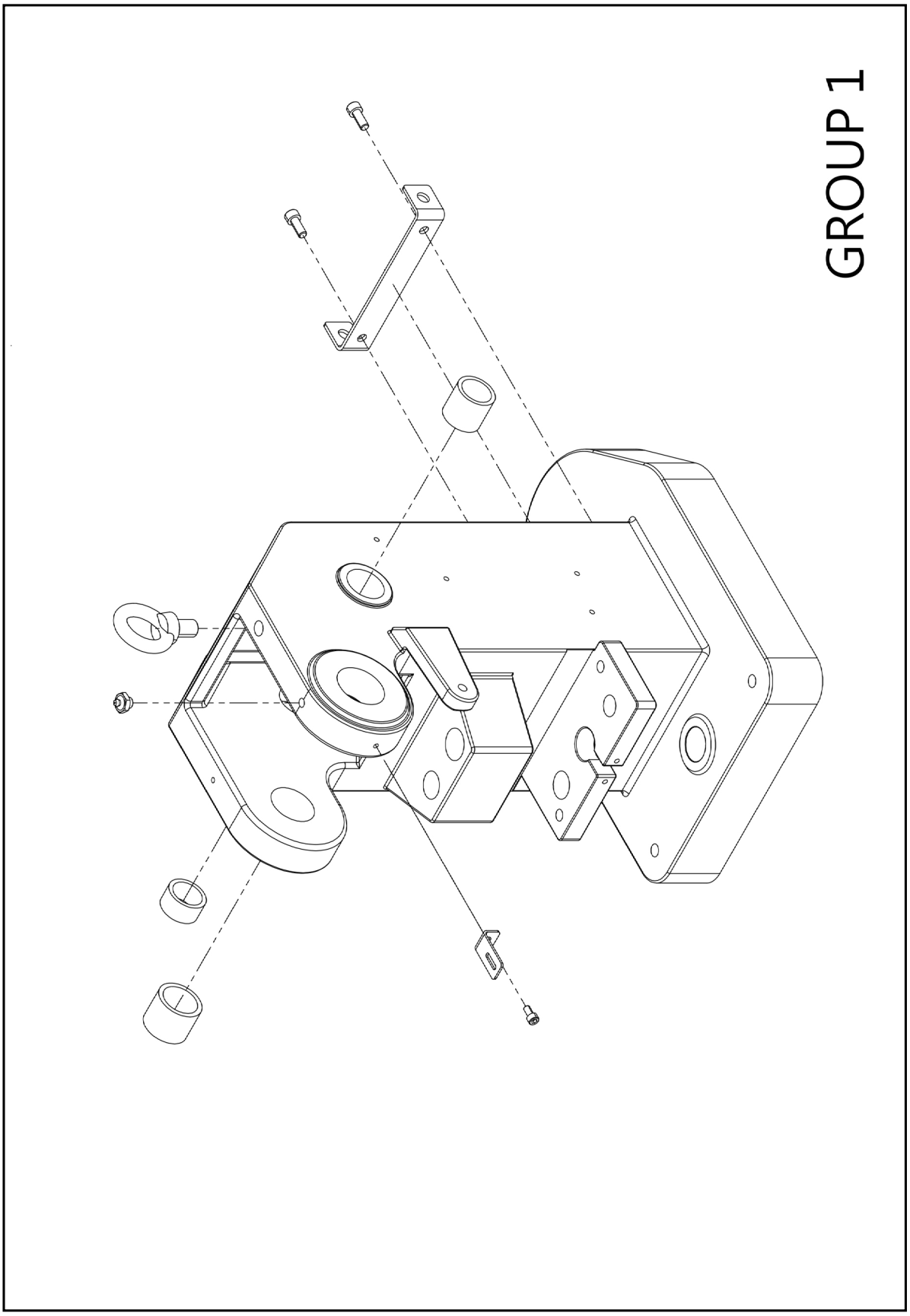

TDP 6s® Sub-Assemblies of Parts

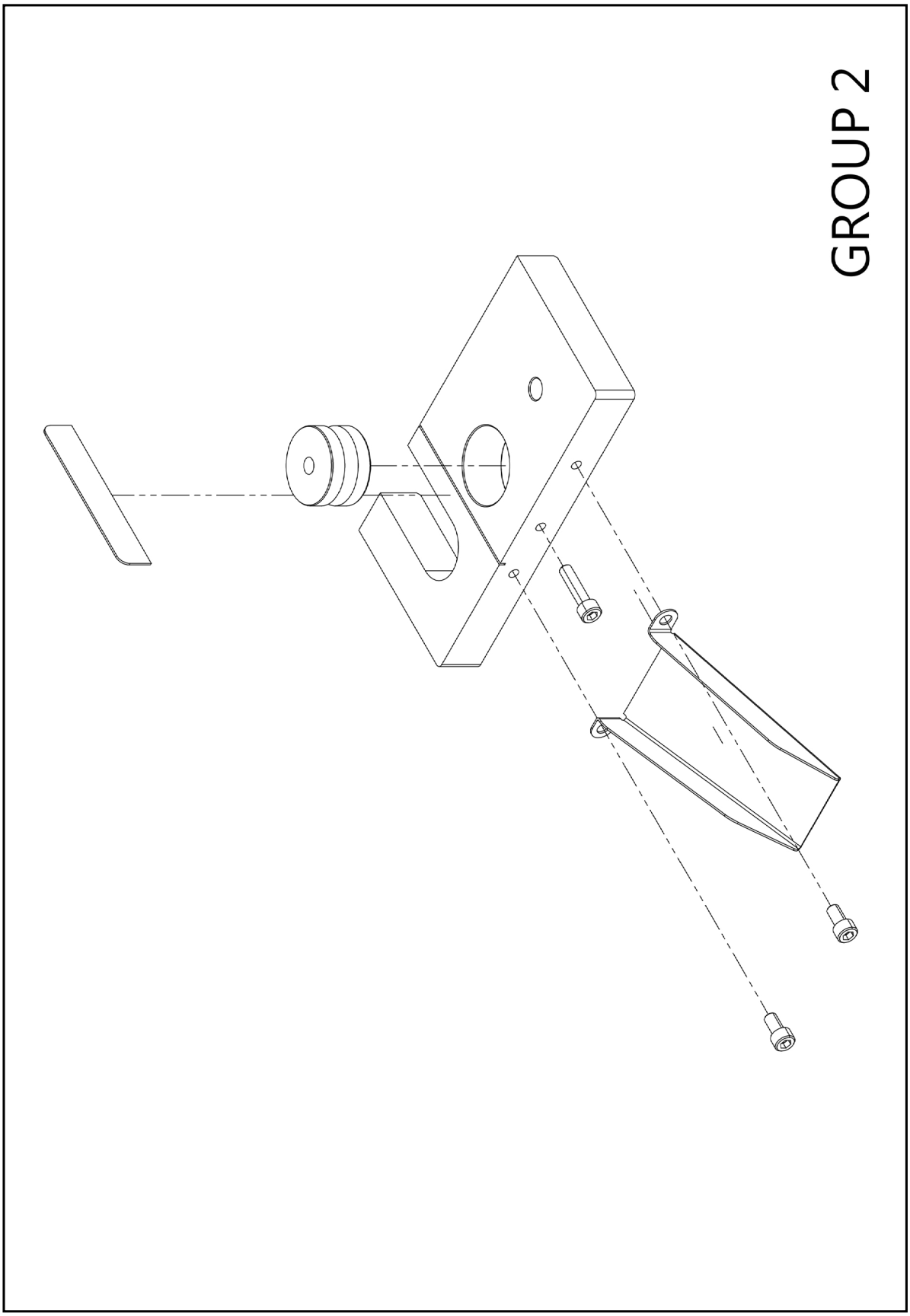

TDP 6s® Sub-Assemblies of Parts

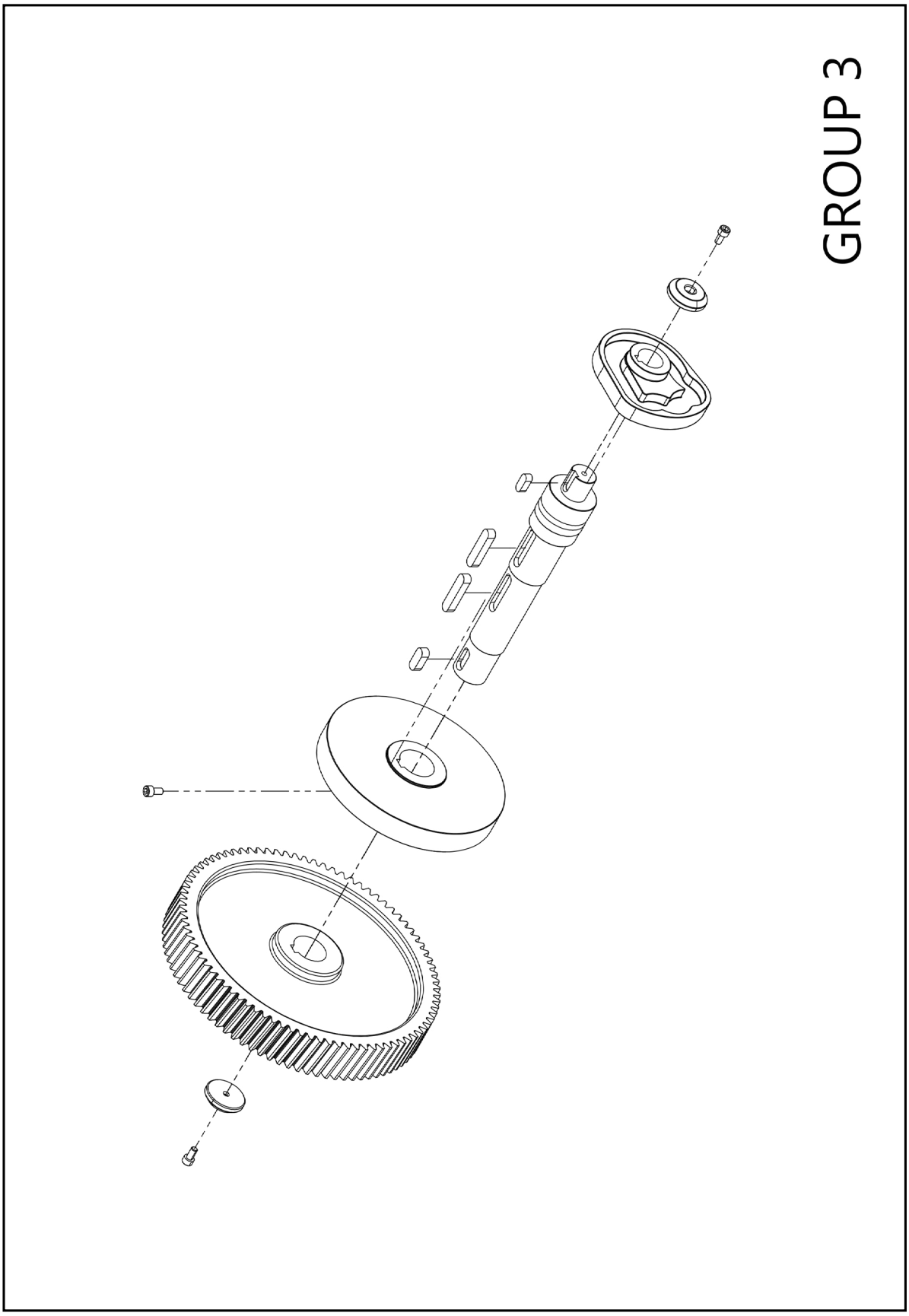

TDP 6s® Sub-Assemblies of Parts

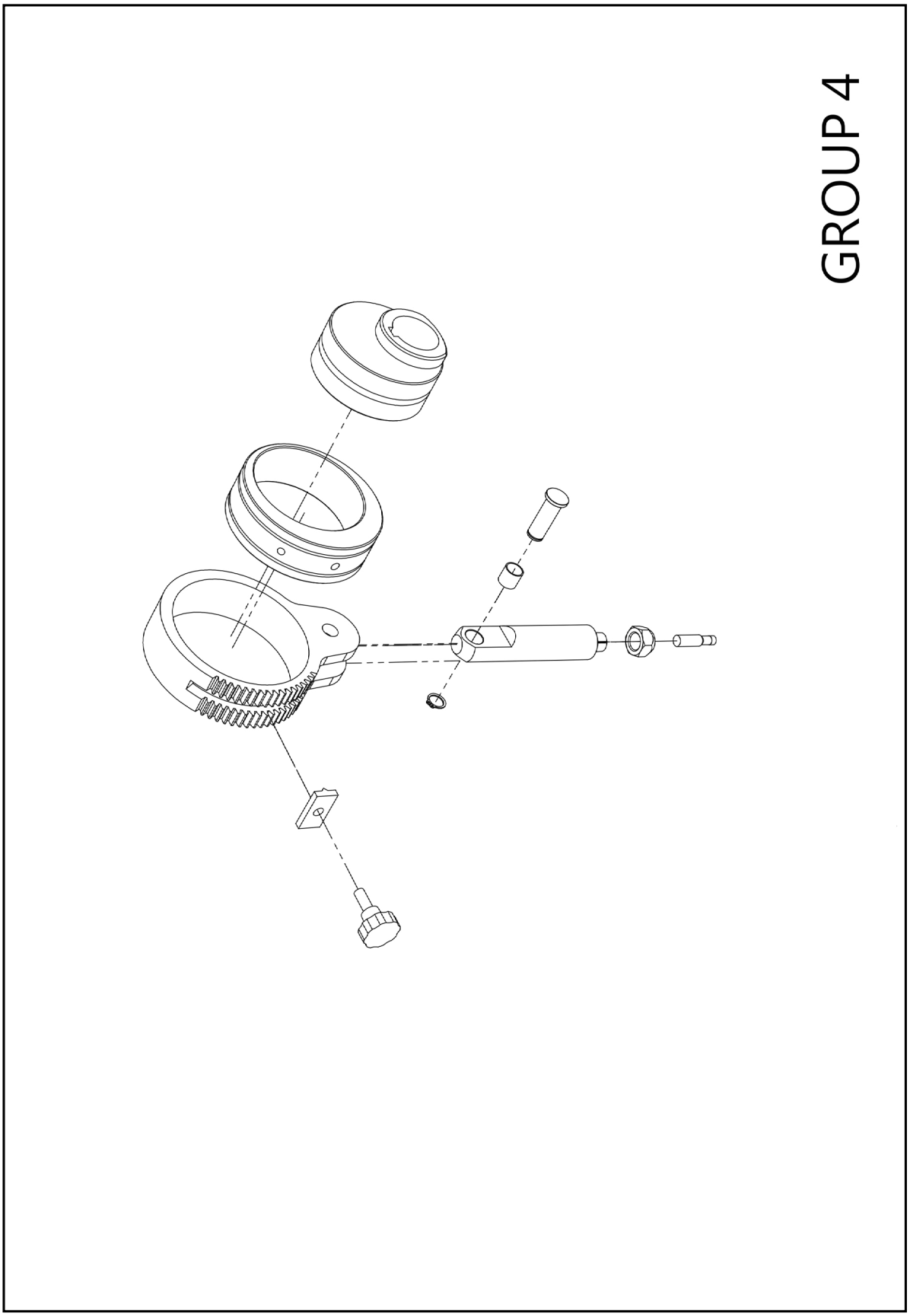

GROUP 5

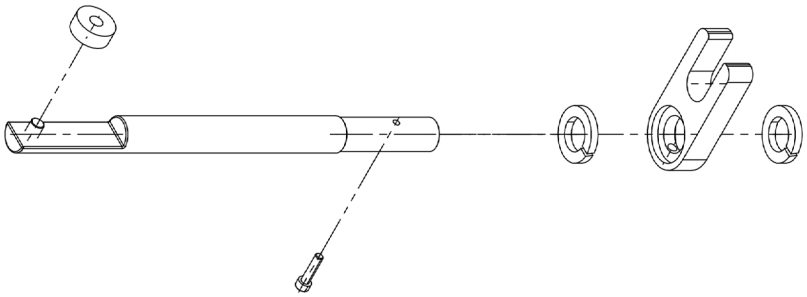

TDP 6s® Sub-Assemblies of Parts

GROUP 6

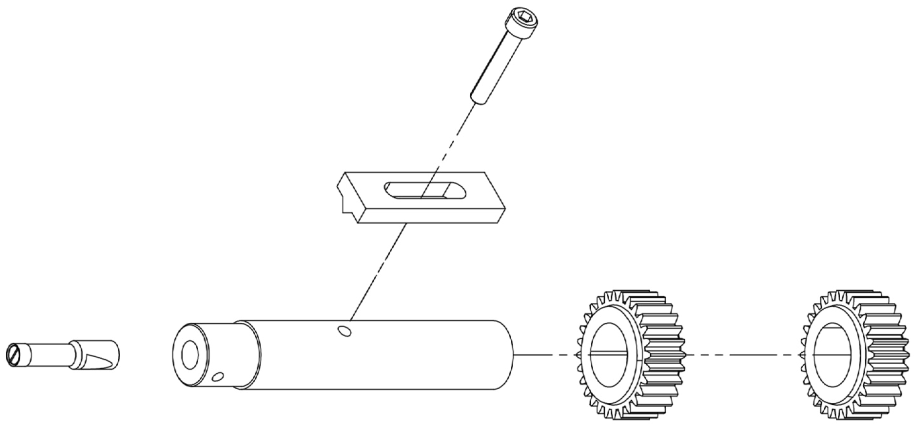

TDP 6s® Sub-Assemblies of Parts

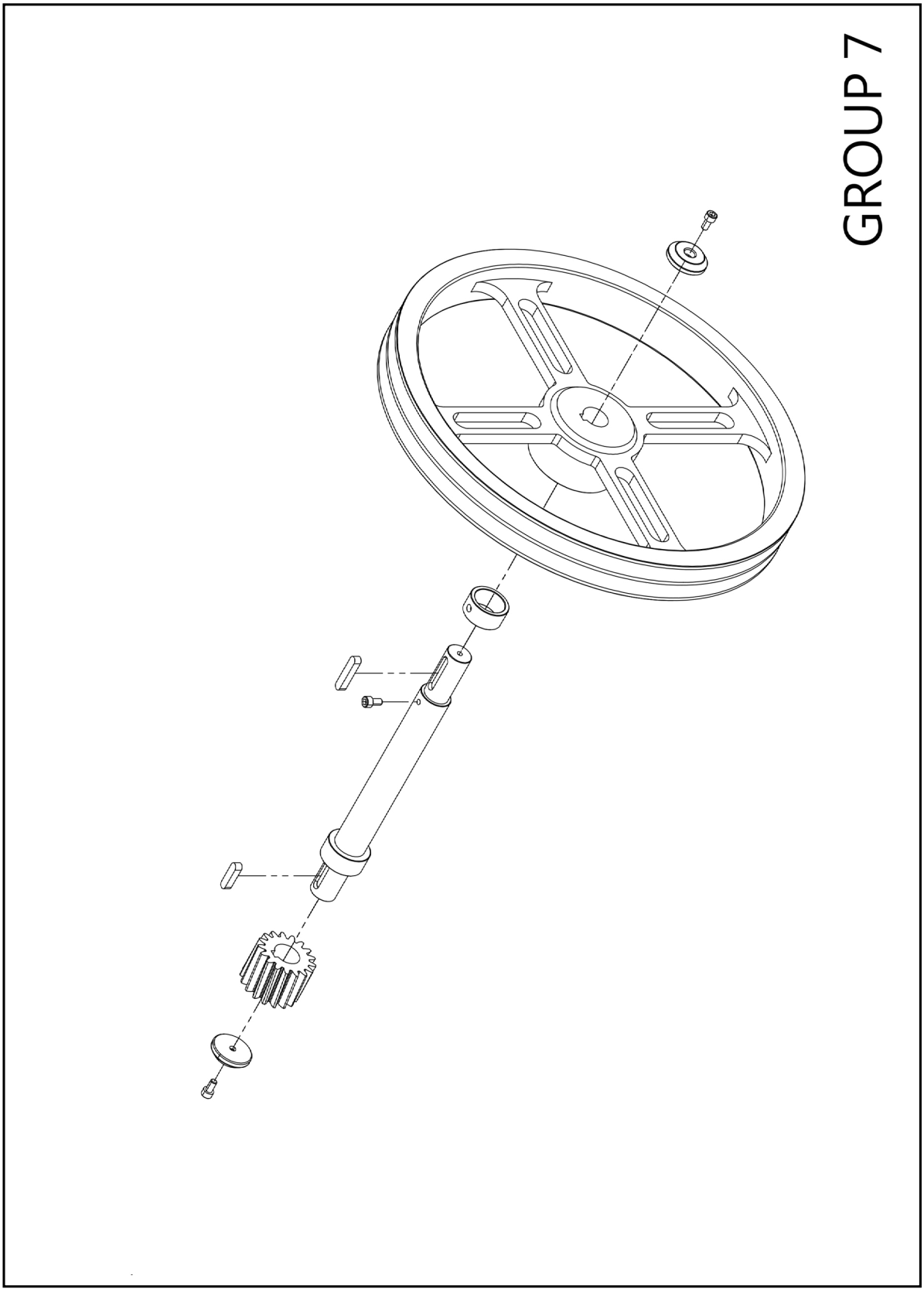

GROUP 8

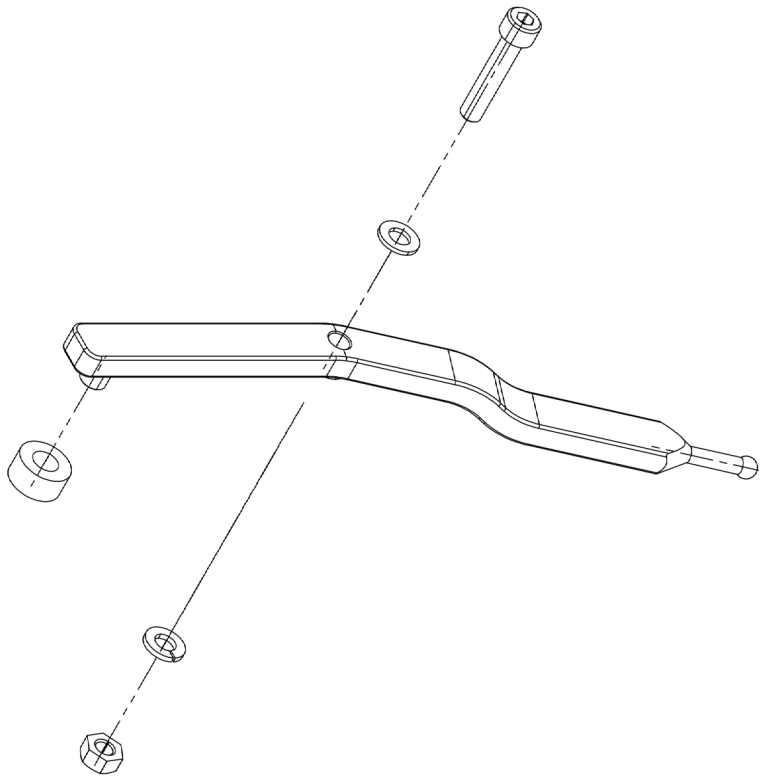

TDP 6s® Sub-Assemblies of Parts

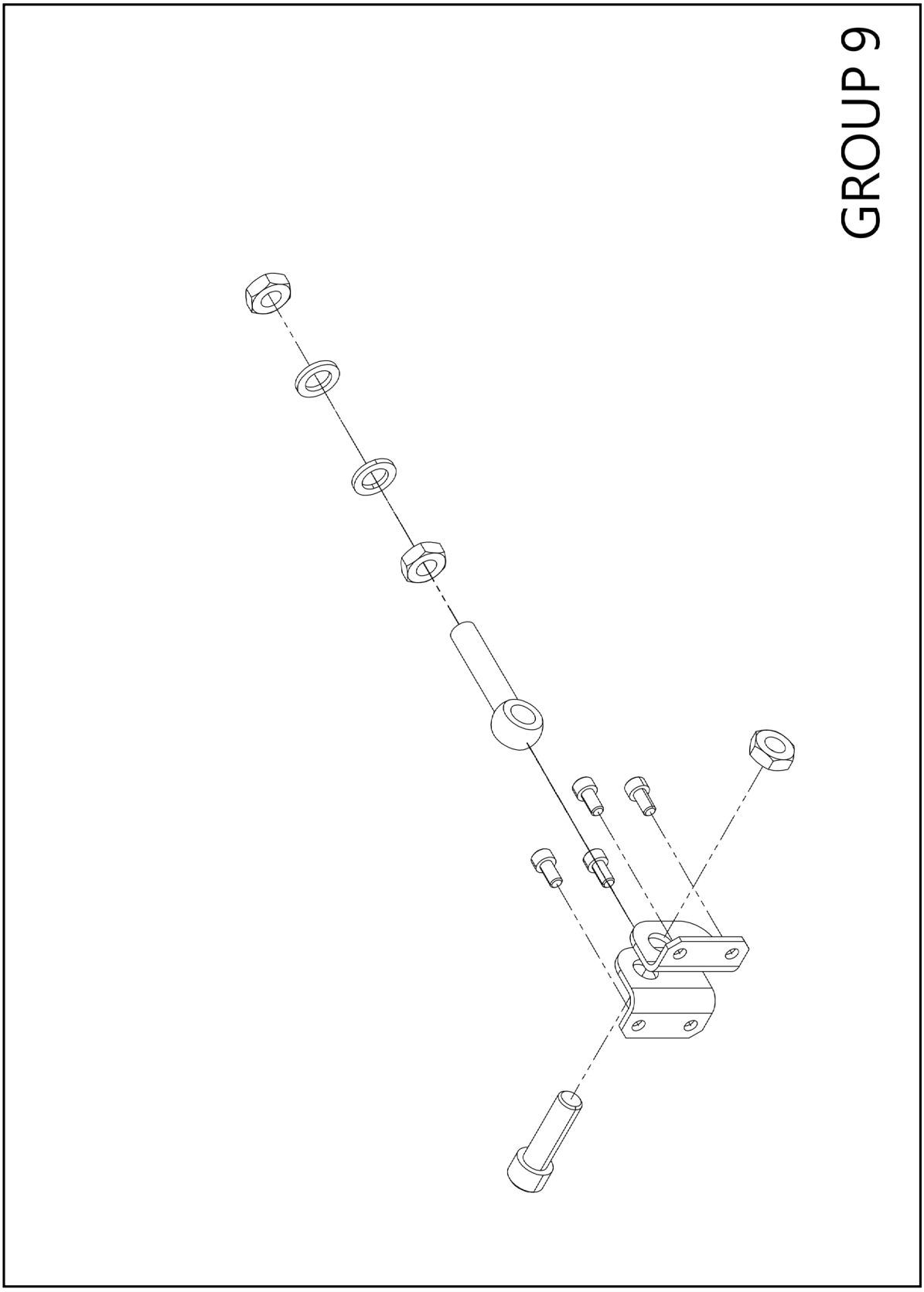

TDP 6s® Sub-Assemblies of Parts

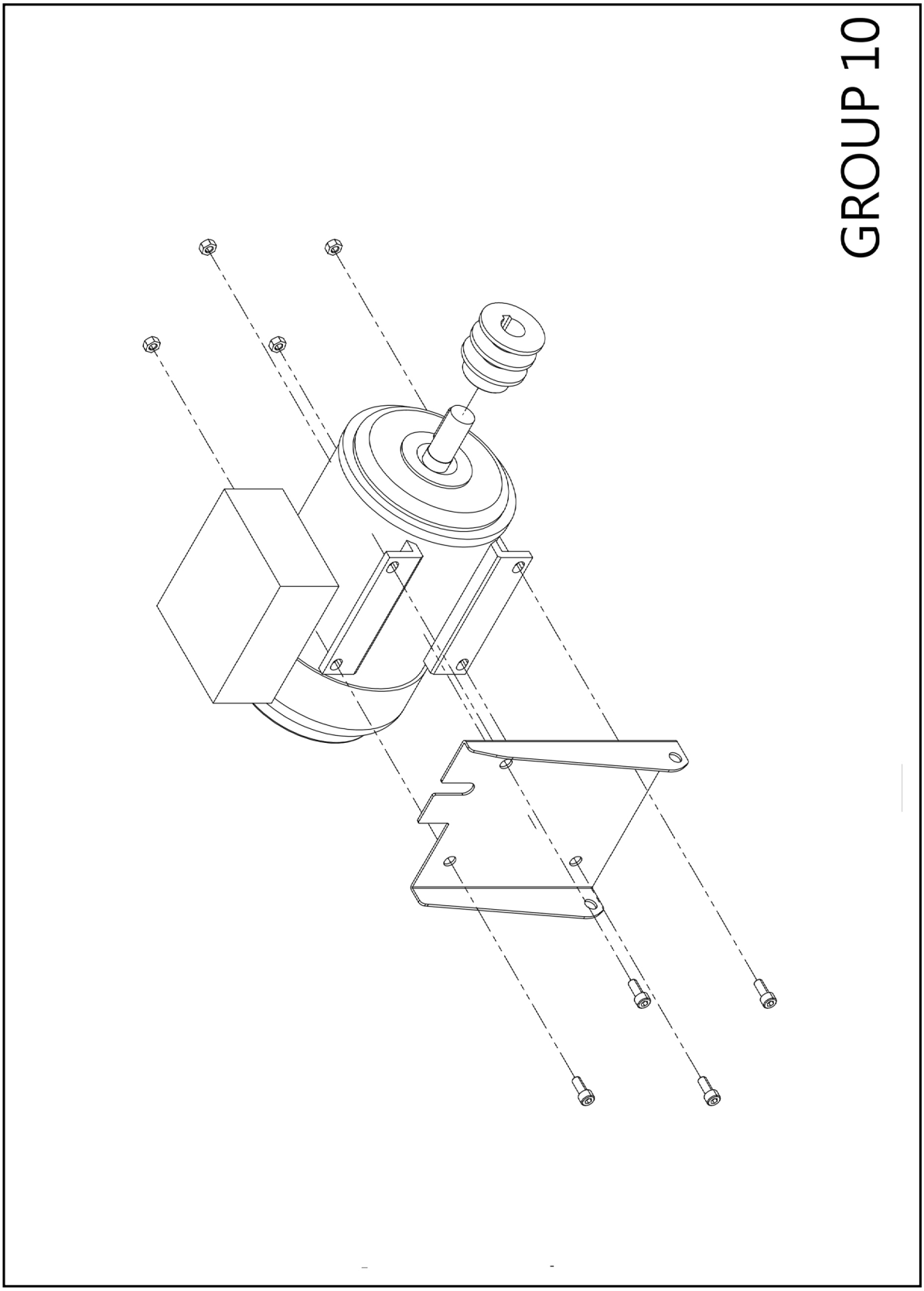

Resources

Helpful Links

Warranty
For information regarding the warranty policy of the TDP 6s® and other LFA products, please visit https://www.lfatabletpresses.com/warranty

LFA Website
In order to aid you in your tablet production, LFA Machines maintains a website that offers a breadth of useful information about the TDP 6s® and other tablet presses. Use our online tools such as the Tablet Mix Calculator to help you in your formulation production or read our regularly published articles that cover a whole range of topics about tablet presses and tablet production.

Visit the LFA homepage at https://www.lfatabletpresses.com

LFA Machines YouTube Channel
Our YouTube videos provide you an opportunity to see how to use our tablet presses, common troubleshooting tips, and other LFA products such as capsule fillers and mixers. We regularly upload videos to give you a visual aid that will hopefully support you in your tablet production efforts. To watch our videos, visit https://www.youtube.com/channel/UCwtbcwja77ai7vX2o34FUkQ

LFA Machines Social Media
Social media is a great way to keep yourself updated on new developments and exciting things happening at LFA Machines. The list below contains our current social media pages:

Twitter: @lfatabletpress
Instagram: @lfatabletpresses
Facebook: https://www.facebook.com/lfatabletpresses
LinkedIn: https://www.linkedin.com/company/lfa-machines-oxford-ltd/

Contact Us

UK
LFA Machines Oxford Ltd
Unit 4B Rowood Estate
Murdock Road
Bicester, Oxfordshire OX26 4PP
+44 (0) 1869 250 234
sales@lfamachines.com
Monday-Friday
9AM-5PM GMT

US
LFA Machines DFW, LLC
955 N. Sylvania Ave
Fort Worth, TX 76111
English: +1 (682) 312 0034
Spanish: +1 (682) 312 0309
sales.usa@lfamachines.com
Monday-Friday
8:30AM-4:30PM UTC (Central)

Germany
LFA Machines Düsseldorf GmbH
Business Parc Am Trippelsberg 92
Düsseldorf, North-Rhine
Westphalia 40589
+41 21188250223
verkauf@lfamachines.com

Taiwan
LFA Machines Taiwan Ltd
7F-5, No. 2, Sec. 2 Taiwan Blvd
West District, Taichung City 403
Taiwan
+886 2773 74704
sales.asia@lfamachines.com

LFA MACHINES

Copyright © 2019 by LFA Machines

www.lfamachines.com

United Kingdom
Unit 4B
Murdock Road
Bicester
Oxfordshire
United Kingdom

United States
955 N Sylvania Ave
Fort Worth
Texas
United States

Germany
Business Parc Am
Trippelsberg 92
Düsseldorf
Germany

Taiwan
403, Section 2, 2
Taiwan Boulevard
Taichung City
Taiwan